6(2009) 343 – 362

Latin American Journal of Solids and Structures

www.lajss.org

Experimental investigation of RC beams strengthened with externally bonded FRP composites

Nadeem A. Siddiqui*

Department of Civil Engineering, King Saud University, Riyadh 11421, Saudi Arabia

Received 1 May 2009;
In revised form 21 Oct 2009

* Author email: nadeem@ksu.edu.sa

Abstract

Use of externally bonded Fiber Reinforced Polymer (FRP) sheets/strips/plates is a modern and convenient way for strengthening of RC beams. Although in the past substantial research has been conducted on FRP strengthened reinforced concrete (RC) beams, but the behavior of FRP strengthened beams under different schemes of strengthening is not well established. In the present paper, efficiency and effectiveness of different but very practical FRP schemes for flexure and shear strengthening of RC beams has been studied. For this purpose, 6 RC beams were cast in two groups, each group containing 3 beams. The specimens of first group were designed to be weak in flexure and strong in shear, whereas specimens of second group were designed just in an opposite manner i.e. they were made weak in shear and strong in flexure. In each group, out of the three beams, one beam was taken as a control specimen and the remaining two beams were strengthened using two different Carbon FRP (CFRP) strengthening schemes. All the beams of two groups were tested under similar loading. The response of control and strengthened beams were compared and efficiency and effectiveness of different schemes were evaluated. It was observed that tension side bonding of CFRP sheets with U-shaped end anchorages is very efficient in flexural strengthening; whereas bonding the inclined CFRP strips to the side faces of reinforced concrete beams are very effective in improving the shear capacity of beams.

Keywords

Fiber Reinforced Polymers, CFRP, Strengthening, Flexure, Shear, RC Beams.

1 INTRODUCTION

Flexural and shear modes of failures are the two prime failure modes for RC beams. Flexural failure is generally preferred to shear failure as the former is ductile whilst the latter is brittle. A ductile failure allows stress redistribution and provides warning to occupants, whilst a brittle

failure is sudden and thus catastrophic. In order to make a shear or flexure deficient RC beam strong enough strengthening is required. Over past few years, external strengthening using Fiber Reinforced Polymer (FRP) composites gained popularity over steel because of several reasons including material cost, lightweight feature and ease of application. Moreover, FRP has more reliable bondline strength as compared to steel where corrosion at the interface is unavoidable in the presence of moisture [10]. The application of FRP sheets to beams involves external bonding of FRP sheets on the tension face of beams using epoxy resins.

Beam strengthening using externally bonded composite sheets/plates/strips, e.g. [3–17], has been studied widely in the last two decades. Meier [9] reported the use of thin CFRP sheets as flexural strengthening reinforcement of concrete beams. He showed that CFRP can replace steel with overall cost savings in the order of 25%. Kaiser [7] tested CFRP composites on full-scale reinforced concrete beams and showed the validity of the strain compatibility method in the analysis of cross-sections. It was suggested that inclined cracking may lead to premature failure by peeling-off of the strengthening sheet. The study included the development of an analytical model for composite plate anchoring, which was shown to be in agreement with test results. Alsayed et al. [4] tested a number of simply supported RC beams to study the effectiveness of the use of GFRP laminates in improving the flexural capacity of beams. FRP laminates were externally bonded to the tension side of the beams. The behavior was presented in terms of load-deflection, load-strain, failure patterns and structural ductility. In addition to that, different anchorage systems were considered. All beams showed a considerable increase in ultimate load capacity with a good energy absorption capability. Triantafillou and Plevris [15, 16] used the strain compatibility method, concepts of fracture mechanics, and proposed an analytical model for the FRP peeling-off mechanism based on the shearing dowel actions of both the steel reinforcement and the FRP plate, to study the short-term flexural behavior of reinforced concrete beams strengthened with FRP laminates. The analytical results of failure mechanisms and corresponding loads were validated through a series of experiments employing thin CFRP sheets. Triantafillou [13] proposed a theoretical model to compute the shear strength capacity of a beam strengthened with externally applied FRP. Later on, this proposed model was calibrated using seventy- five published experimental test results [14] which resulted in an experimental program to predict the effective strain in FRP laminates. In the year 2001, Matthys and Triantafillou [8] made slight modification of Triantafillou and Antonopoulos [14] expression of effective strain and indicated that in addition to all other influential factors, effective strain in FRP is also a function of the beam shear span-to-effective depth ratio. However, Matthys and Triantafillou [8] made this comment on the basis of the least square fitting of experimental results collected from past literatures. Denianud and Roger Chen [6] presented a review summary of several shear design methods for reinforced concrete beams strengthened with composites. Collotti et al. [5] developed a theoretical model based on truss analogy method in conjunction with the theory of plasticity. They reported that the theoretical model provided good correlation with past experimental results. Adhikary [3] conducted an experimental study on shear strengthening characteristics of continuous unidirectional flexible carbon/epoxy laminates bonded to RC beams. Several

external reinforcement schemes were evaluated and it was concluded that the U-laminate configuration is the most effective strengthening protocol for shear strength enhancement. Zhang and Hsu [17] reported the result of an experimental study conducted on eleven beam specimens strengthened with both procured and wet layup composites systems. The recent edition of the ACI 440 [1, 2] proposed a theoretical model to compute the enhancement of shear strength of RC beams using external FRP laminates. They focused on the developed effective strain in composites at failure which varies depending upon the variability of composites material properties, dimensions and the application techniques.

The above review of literature illustrates that although substantial research has been conducted on FRP strengthening of RC beams, but still the behavior of FRP strengthened beams under different schemes of strengthening is not well established. In the present study, through an experimental program, efforts have been made to study the efficiency and effectiveness of two different but very practical FRP schemes for flexure and shear strengthening of RC beams.

2 EXPERIMENTAL PROGRAM

The success of different CFRP schemes for flexure and shear strengthening of RC beams has been presented through an experimental program conducted at Department of Civil Engineering, King Saud University, Saudi Arabia. For this purpose, 6 RC beams were cast in two groups, each group containing 3 beams. The specimens of first group (Fig. 1) were designed to be weak in flexure; strong in shear whereas specimens of second group (Fig. 2) were designed to be weak in shear and strong in flexure. The above designs of specimens were based on ACI 440.2R-08 [2]. The specimens of first group were used for flexural strengthening whereas second group specimens were employed for shear strengthening. In each group, out of the three beams, one beam was taken as a control specimen and the remaining two beams were strengthened using two different FRP schemes. In the first group, in first scheme, FRP sheets were externally bonded at the bottom of the beam using epoxy (Fig. 3). In the second scheme the FRP sheets, externally bonded at the bottom, were also U-wrapped at the ends using CFRP strips to avoid any possible debonding (Fig. 4). In the second group, in the first scheme, CFRP strips were attached at an angle of 90° with respect to longitudinal axis of the beam (Fig. 5) whereas in the second scheme strips were attached at an angle of 30° from the same axis of the beam (Fig. 6). These strips were attached through epoxy on the side faces of the beam. All these beams were then tested under similar loading and response of control and strengthened beams were compared to evaluate the effectiveness of presented schemes. The nomenclature used for various beam specimens are shown in Table 1.

2.1 Material properties

2.1.1 Concrete and steel

The mix proportions used to cast the designed test specimens are presented in Table 2. Single batch was used to cast all the specimens. Six cylinders (150 × 300 mm) were cast to determine the 28-days compressive strength, f'_c, from the batch. The mix was designed for 35 MPa of

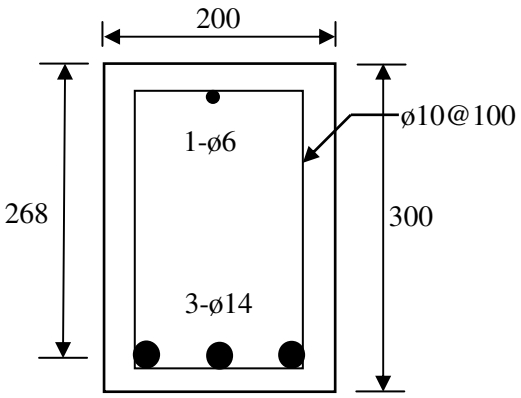

Figure 1 Cross section of Group-1 beam specimens (All dimensions are in mm).

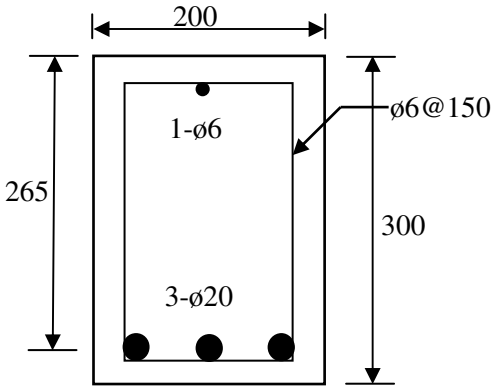

Figure 2 Cross section of Group-2 beam specimens (All dimensions are in mm).

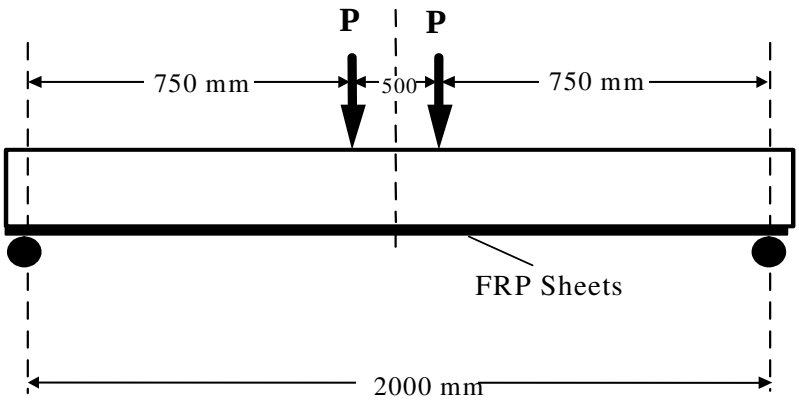

Figure 3 Group-1 beam specimen strengthened under scheme-1.

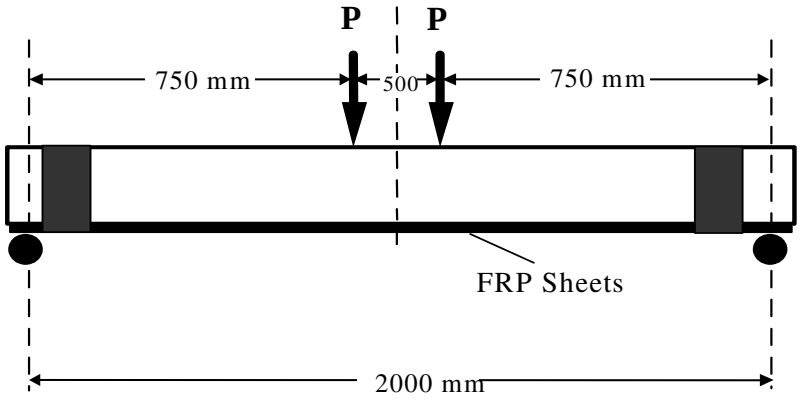

Figure 4 Group-1 beam specimen strengthened under scheme-2.

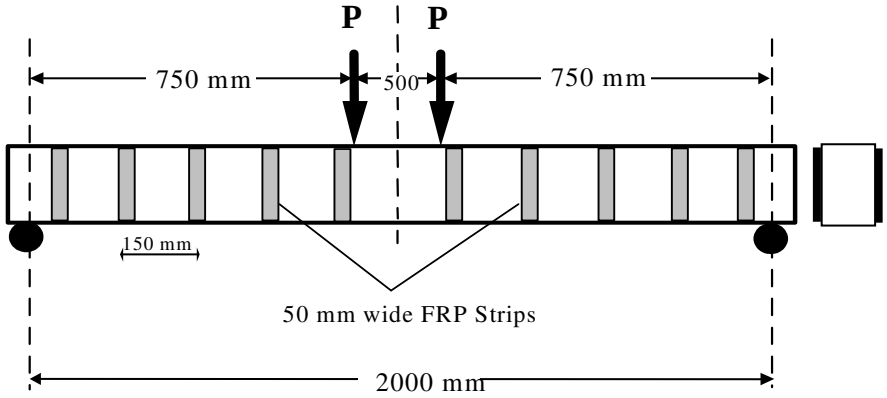

Figure 5 Group-2 beam specimen strengthened under scheme-1.

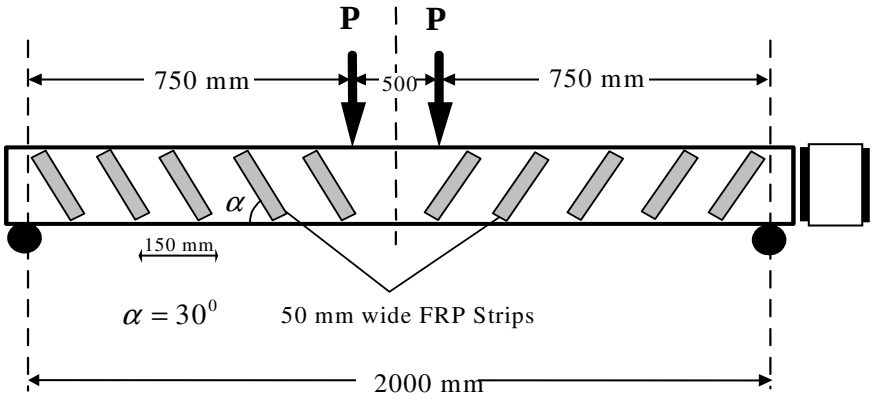

Figure 6 Group-2 beam specimen strengthened under scheme-2.

Table 1 Nomenclature and details of test specimens.

Group No.	Specimen designation	Details of strengthening schemes
1 (3 specimens)	BCF	A control beam, weak in flexure but strong in shear.
	BFS-1	Strengthened specimen, obtained after strengthening of another specimen of BCF beam using scheme-1. In this scheme a single layer of CFRP sheets at the bottom (tension) face was externally bonded using epoxy.
	BFS-2	Strengthened specimen, obtained after strengthening of another specimen of BCF beam using scheme-2. In this scheme, after externally bonding a single layer of CFRP sheets at the bottom (tension) face, U-wrap, formed by CFRP strips, were also used at the ends to prevent any possible debonding of sheets.
2 (3 specimens)	BCS	A control beam, weak in shear but strong in flexure.
	BSS-1	Strengthened specimen, obtained after strengthening of another specimen of BCS beam using scheme-1. In this scheme vertical CFRP strips were attached through epoxy on the side faces of the beam.
	BSS-2	Strengthened specimen, obtained after strengthening of another specimen of BCS beam using scheme-2. In this scheme inclined CFRP strips were attached through epoxy on the side faces of the beam.

compressive strength. The epoxy adhesive, required for bonding the CFRP sheets to the surface of the beam, was of two-component cold-curing type. The ultimate tensile strength of the adhesive was about 25 MPa and the elastic modulus was 8.5 GPa. The Properties of the reinforcing bars along with other materials are reported in Table 3.

Table 2 Mix proportions of concrete mix.

Material	Weight (kg)
Cement	136.644
Sand	191.189
Aggregate (3/4")	191.189
Aggregate (3/8")	95.594
Water	72.180
Slump	120 mm

Table 3 Material properties of used steel, concrete, CFRP and adhesive.

Group	Beam	Design strength f'_c (MPa)	Tension reinforcement (steel)		CFRP Sheet/Strip		Adhesive	
			Quantity	f_y (MPa)	f_u (MPa)	No. of layers	f_u (MPa)	Eu (GPa)
1	BCF	35.0	3ϕ14	420	846	0	25	8.5
	BFS-1	35.0	3ϕ14	420	846	1	25	8.5
	BFS-2	35.0	3ϕ14	420	846	1	25	8.5
2	BCS	35.0	3ϕ20	420	846	0	25	8.5
	BSS-1	35.0	3ϕ20	420	846	1	25	8.5
	BSS-2	35.0	3ϕ20	420	846	1	25	8.5

2.1.2 Epoxy system

The epoxy system used in the study consists of two parts resin and one part hardener; mix in a ratio of 3:1. The resin and the hardener were hand mixed thoroughly using a special mixing tool for at least 5 minutes. A thin layer of the epoxy (about 1 mm) was applied to the concrete surface and CFRP sheet/strip was then attached to the surface of the epoxy. Special attention was made to assure that there was no void between the sheet/strip and the concrete surface. All CFRP sheets/strips used in strengthening were of unidirectional orientation. After strengthening, the specimens were left at laboratory temperature for 2 days before testing to make sure that the epoxy had enough time to cure. The manufacturer supplied data for CFRP-system properties are shown in Table 4.

Table 4 Manufacture's reported FRP-system properties (CFRP).

Thickness per ply, t_f	1.0 mm
Ultimate tensile strength f^*_{fu}	846 N/mm^2
Rupture strain ε^*_{fu}	0.011 mm/mm
Modulus of elasticity of FRP Laminates, E_f	77.28 kN/mm^2

2.2 Preparation of the test specimens

2.2.1 Specimen size and steel reinforcement details

In the present experimental study, a total of 6 RC beams were cast in two groups; each group containing 3 beams. The specimens of first group were designed to be weak in flexure and strong in shear, whereas specimens of second group were designed just in an opposite manner

i.e. they were made weak in shear and strong in flexure. All the beams had a cross section of 200 × 300 mm and a simply supported span of 2000 mm. Out of a total number of three beams, one beam in each group was used as a control specimen and other two were employed to prepare CFRP strengthened beams. As the beams of Group-1 were designed to fail in flexure, they were reinforced with deformed $3\phi 14$ mm steel bars in tension side (i.e. bottom side of the beam) with $\phi 10$ mm steel stirrups @ 100 mm centre to center spacing. A $\phi 6$ mm bar was also used in the compression side to tie up the stirrups (Fig. 7). The beams of Group-2 were designed to fail in shear, and for this reason they were reinforced with deformed $3\phi 20$ mm steel bars in tension side with $\phi 6$ mm steel stirrups @ 150 mm centre to center spacing. Similar to Group-1 specimens, a $\phi 6$ mm bar was also used in the compression side to tie up the stirrups (Fig. 8). After casting (Fig. 9), the specimens were submitted to intermittent spraying of water everyday for two weeks and then left to dry for next two weeks. On the twenty sixth day after casting, 2 beams were strengthened by externally bonding the CFRP sheets using epoxy to the concrete surface. The following procedure was used for externally bonding the sheets:



Figure 7 A view of Group-1 specimens' reinforcement from inside the mould.

2.2.2 Surface treatment phase

The surface of the beam, where the sheet/strip was to be attached, was first grinded manually and then subjected to sand blasting to be able to develop a sound bond and withstand the imposed stresses. The process included smoothing out the unevenness in the surface, and rounding the corner of the beam (for bonding the U-strips in Group-1, scheme-2). After that the surface of the concrete was cleaned with acetone several times until no longer blackness is shown on the washcloth. At this point the sheets/strips were also wiped with acetone to remove dust or any adhered substances.



Figure 8 A view of Group-2 specimens' reinforcement from inside the mould.



Figure 9 Casting of RC beams using ready mix concrete.

2.2.3 Attaching the CFRP sheets

After preparing the concrete surfaces and wiping out the sheets/strips, the sheets were attached to the concrete surfaces using epoxy. Any excess epoxy was squeezed out by pressing the sheets/strips to the concrete. The sheets/strips were then kept pressed to the concrete until hardening. The specimens were kept in the laboratory under control conditions (25° C ± 2° C and 30% relative humidity), until the day of testing. The sheets were attached to the beams as per the designed schemes. For Group-1 specimens, in the first scheme, CFRP sheets were attached at the tension (i.e. bottom) face of the beam whereas in the second scheme, after externally bonding a single layer of CFRP sheets at the bottom tension face, U-strip anchorages were also provided at the ends of the beam (Figs. 10 and 11). For Group-2 specimens, in the first scheme, CFRP strips were attached at 90° with respect to longitudinal axis of the beam, whereas in the second scheme strips were attached at an angle of 30° from the same axis of the beam (Fig. 12).



Figure 10 Beam strengthened with CFRP sheet only (Group-1, scheme -1).

2.3 Test procedure and setup

The beams were tested using Amsler testing machine. All the beams were tested simply supported and subjected to two point loads, symmetrically placed at equal distance (500 mm) about the beam centerline (Figures 3 through 6). The central deflections were monitored using a linear variable displacement transducer (LVDT). The applied loads and corresponding LVDT deflections were recorded using a data acquisition system. Application of the loads and the recording process continued until the failure of the beam occurred. Figure 13 shows the test setup used for testing of beams in flexure.



(a) (b)

Figure 11 (a) Beam strengthened with CFRP sheet and U-anchorage (Group-1, scheme -2); (b) A close view of U-strip end anchorage.



Figure 12 Beams strengthened with vertical and inclined strips (Group-2, Schemes 1 and 2).



Figure 13 Test set up used for testing of beam specimens.

3 TEST RESULTS AND DISCUSSION

3.1 Response of flexure-strengthened beams

The load-deflection relationships for all the three flexure-strengthened RC beams (i.e. Group-1 specimens) are plotted in Figs. 14 and 15. These figures show a comparison of first and second schemes of strengthening with control beam respectively. These figures illustrate that, compare to the response of un-sheeted control beam, the sheeted beams achieved a substantial gain in the strength. However, at the same time they also showed a reduced deformation capacity or ductility. The strength gain and the ductility reductions are the two main features of flexural strengthening of RC beams using FRP sheets. Figure 15 also shows the effectiveness of using end anchorages in increasing the load carrying capacity and achieving a better deformation capacity. Due to the end anchorage the load carrying capacity and deformation capacity were further increased.

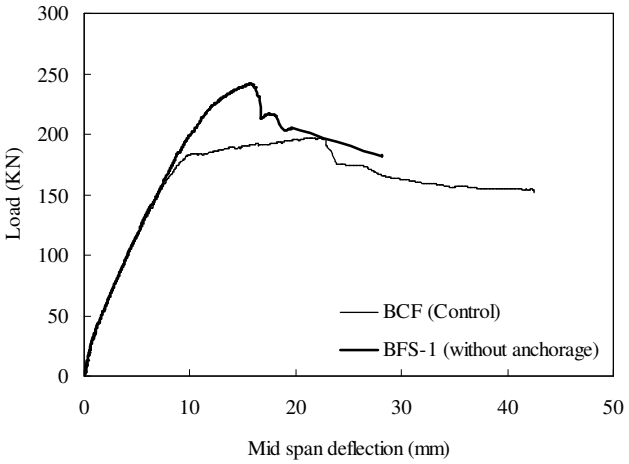

Figure 14 Load-deflection curves of control and strengthened beams (Group-1, scheme -1).

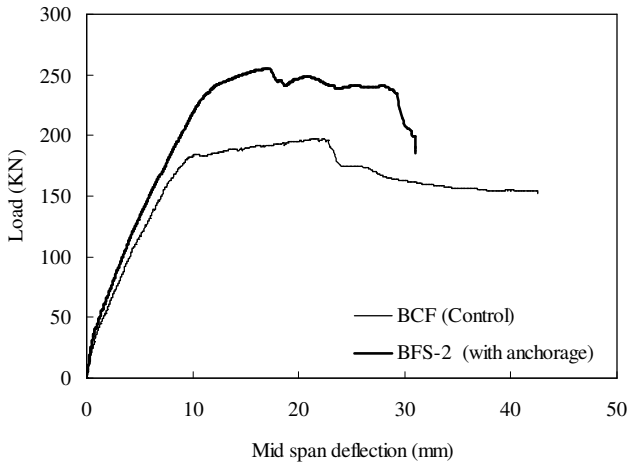

Figure 15 Load-deflection curves of control and strengthened beams (Group-1, scheme -2).

A summary of the test results, which include the values of ultimate loads and ultimate displacements, is given in Table 5. The test results clearly show that CFRP sheets increase the load carrying capacity but at the same time reduce the deformation capacity. However, end anchorages increase both the load carrying capacity and deformation capacity further.

Table 5 Summary of test results (Group-1 specimens).

Beam Specimens	Ultimate load (kN)	% increase with respect to control	Ultimate displacement (mm)	% decrease with respect to control
BCF	197.2	-	42.55	-
BFS-1	241.5	22.5	24.84	41.62
BFS-2	255.2	29.4	31.28	26.49

Figures 16 through 18 show the general failure patterns observed in the Group-1 beam specimens. It was observed that failure of control specimen was purely due to flexure as the cracks initiated near the mid span and propagated almost in vertical direction with the increase of applied load until failure (Fig. 16). At the later stages of loading concrete crushing was also observed in the compression zone (near mid span) as shown in Fig. 16.

For the beam, strengthened without any end anchorages failure was due to debonding of CFRP sheets (Fig. 17). However, when debonding was prevented using U-wrap at the ends, failure was due to crushing of concrete in the compression zone near the mid span region (Fig. 18).

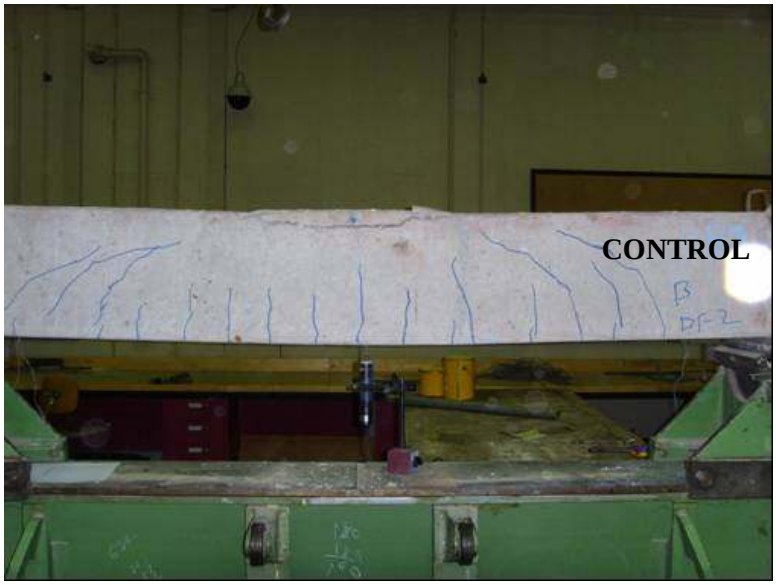

Figure 16 Flexural failure of Group-1 control beam specimen.

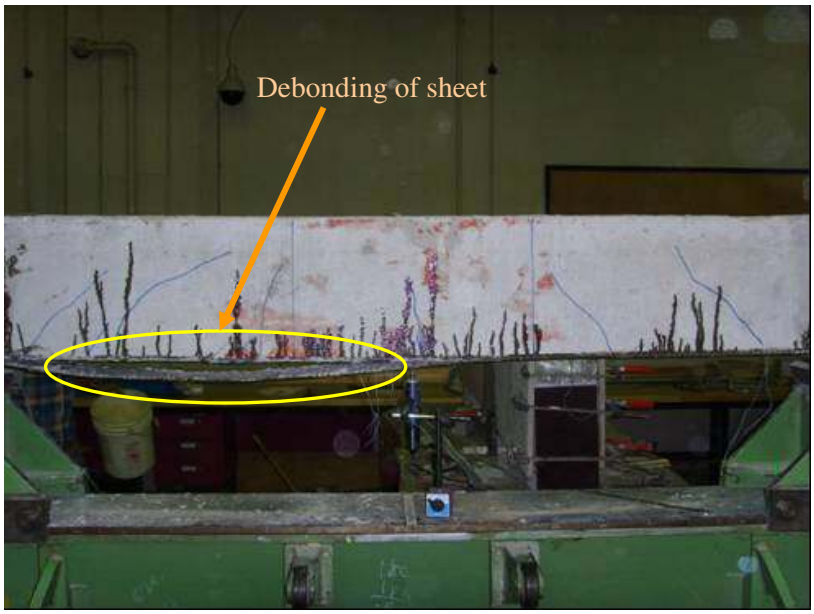

Figure 17 Failure of without-end-anchorage strengthened beam specimen due to debonding of sheets (Group-1, Scheme-1).

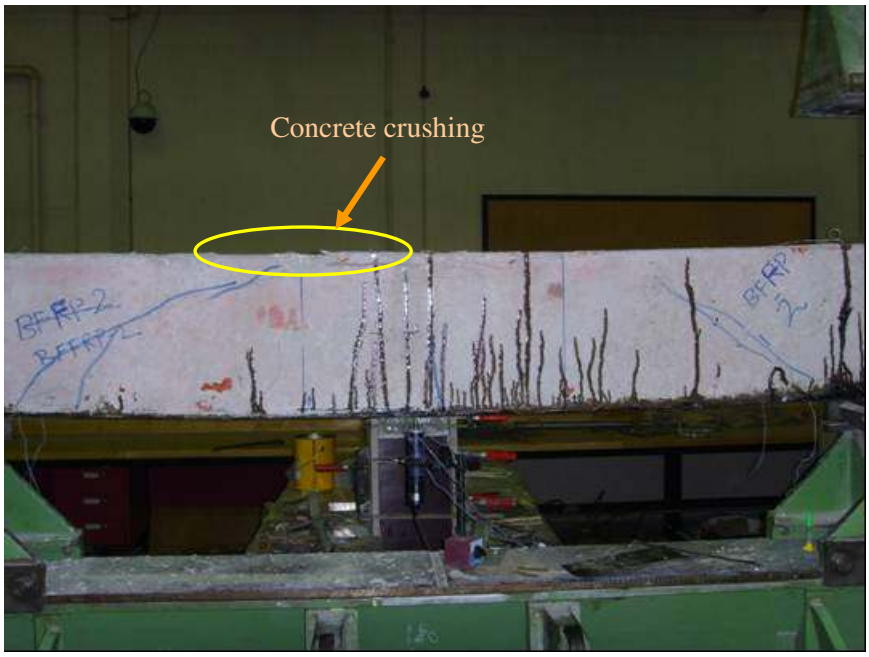

Figure 18 Failure of strengthened beam (with-end-anchorage) specimen due to crushing of concrete (Group-1, Scheme-2).

3.2 Response of shear-strengthened beams

The load-deflection relationships for all the three beams are plotted in Figs. 19 and 20. These figures show a comparison of first and second schemes of strengthening with control beam respectively. These figures illustrate that, compare to the response of control beam, the CFRP-strip retrofitted beams achieved a substantial gain in the strength. However, at the same time they also showed a reduced deformation capacity. The strength gain and the deformation capacity reductions are the two main characteristics of CFRP-strengthening of RC beams. Figure 19 also shows the effectiveness of using inclined strips in increasing the load carrying capacity and achieving better deformability. Due to the inclination of the strips the load carrying capacity and deformation capacity were further increased as inclined strips arrest the propagating cracks (due to diagonal tension) in a better way than vertical strips.

A summary of the test results, which include the values of ultimate loads and ultimate displacements, is given in Table 6. The table clearly shows that for the beam strengthened with vertical strips (scheme-1), load capacity was increased substantially compared to the control beam. However, the deformation capacity was reduced as the failure occurred at about half of the control specimen ultimate displacement. For the beam, strengthened with inclined CFRP strips (scheme-2), the observed load capacity as well as deformation capacity, measured in terms of ultimate displacement, was substantially higher than the beam strengthened with vertical strips. This shows the far better performance of inclined strips compared to vertical CFRP strips in shear strengthening of RC beams.

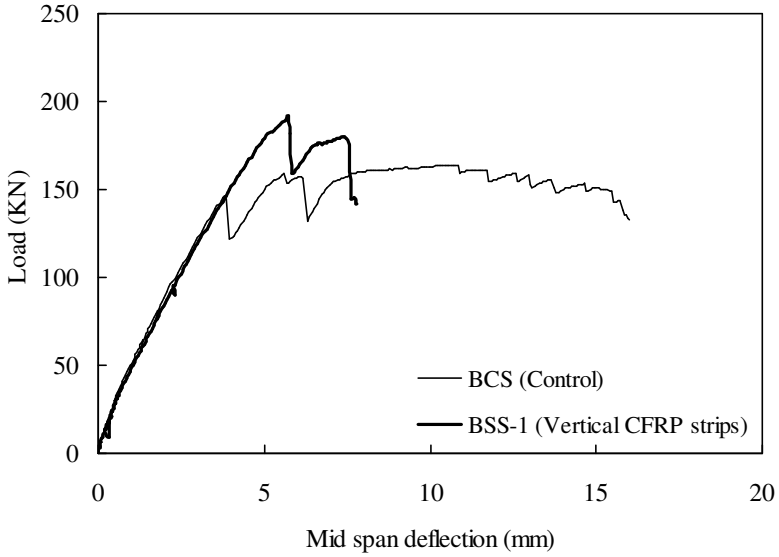

Figure 19 Load-deflection curves of control and strengthened beams (Group-2, Scheme -1).

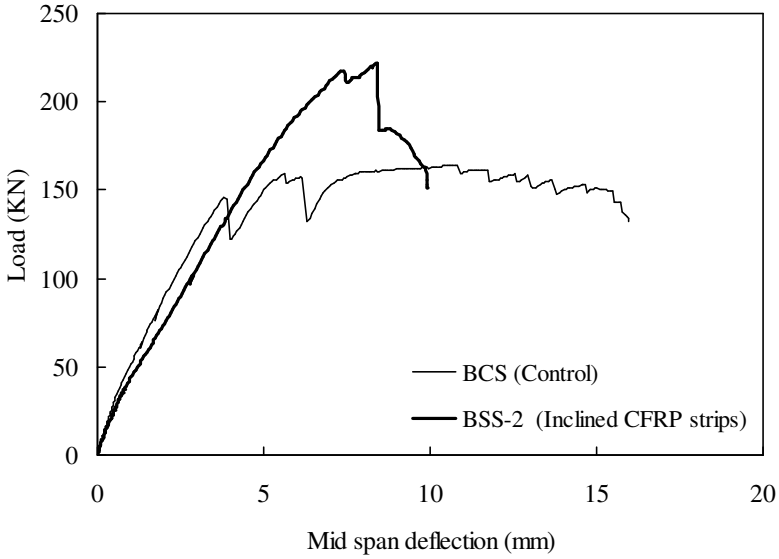

Figure 20 Load-deflection curves of control and strengthened beams (Group-2, Scheme -2).

Table 6 Summary of the test results (Group -2 specimens).

Beam Specimens	Ultimate load (kN)	% increase with respect to control	Ultimate displacement (mm)	% decrease with respect to control
BCS	81.98	-	15.98	-
BSS-1	95.97	17.06	7.78	51.31
BSS-2	111.01	35.41	9.92	37.92

Figures 21 through 24 show the general failure patterns observed in the Group-2 beam specimens. It was observed that failure of control specimen was purely due to shear as the cracks initiated near the support and propagated almost at 45° from the horizontal direction with the increase of applied load until failure (Figs. 21 and 22). The failures of strengthened beams were primarily due to debonding of CFRP strips (Figs.23 and 24). The observed debonding was more in case of vertical strips than inclined strips.

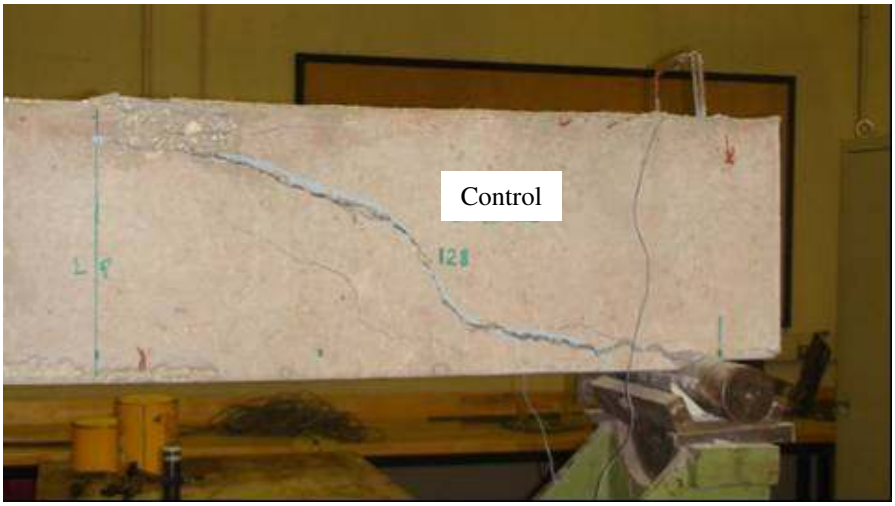

Figure 21 Shear failure of Group-2 control beam specimen.

4 CONCLUSIONS

In the present paper efficiency and effectiveness of some very practical FRP schemes for flexure and shear strengthening of RC beams has been investigated experimentally. It was observed that tension side bonding of CFRP sheets with U-shaped end anchorages is very effective in flexural strengthening of RC beams as this scheme not only increases the flexural capacity substantially, but also maintains sufficient deformation capacity. For shear strengthening, externally bonded inclined CFRP-strips show a far better performance than vertical CFRP-strips

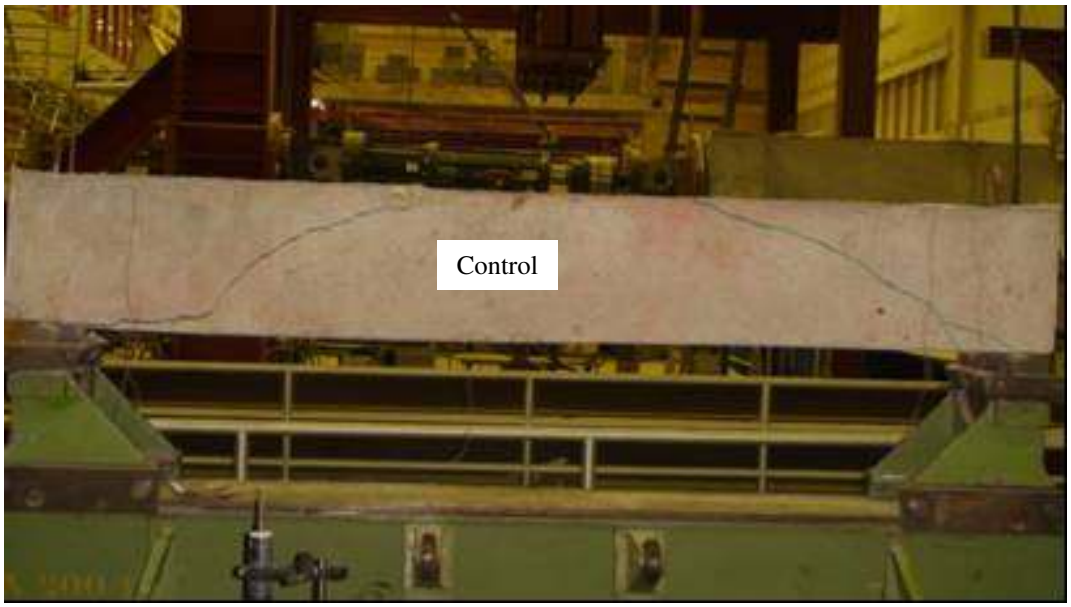

Figure 22 Shear failure of Group-2 control beam specimen (another view).



Figure 23 Failure of vertical strip strengthened RC beam specimen (Group-2, Scheme-1).



Figure 24 Failure of inclined strip strengthened RC beam specimen (Group-2, Scheme-2).

as specimen strengthened using inclined strips gives higher shear and deformation capacity than specimen strengthened using vertical strips. Also the inclined CFRP-strips arrest the propagating cracks more effectively than the vertical CFRP-strips.

Acknowledgement The experimental work presented in this paper was funded by the Deanship of Scientific Research, Research Centre, College of Engineering, King Saud University, Saudi Arabia.

References

[1] ACI Committee 440. *Guide for the design and construction of externally bonded FRP systems for strengthening concrete structures (ACI 440.2R-02).* American Concrete Institute, Farmington Hills, Michigan, USA, 2003.

[2] ACI Committee 440. *Guide for the design and construction of externally bonded FRP systems for strengthening concrete structures (ACI 440.2R-08).* American Concrete Institute, Farmington Hills, Michigan, USA, 2008.

[3] B. Adhikary. Behavior of concrete beams strengthened in shear with carbon-fiber sheets. *Journal of Composites for Construction, ASCE*, 8(3):258–264, 2004.

[4] S.H. Alsayed, Y.A. Al-Salloum, and T.H. Almusallam. Rehabilitation of the infrastructure using composite fabrics, final report – research project no. AR-16-52. Technical report, King Abdulaziz City for Science and Technology (KACST), Riyadh, Saudi Arabia, 2002.

[5] V. Colotti, G. Spadea, and R.N. Swamy. Analytical model to evaluate failure behavior of plated reinforced concrete beams strengthened for shear. *ACI Structural Journal*, 101(6):755–764, 2004.

[6] C. Deniaud and J.J. Roger Cheng. Review of shear design methods for reinforced concrete beams strengthened with fiber reinforced polymer sheets. *Canadian Journal of Civil Engineering*, 28:271–281, 2001.

[7] H.P. Kaiser. Strengthening of reinforced concrete with epoxy bonded carbon-fiber plastics, doctoral thesis. Technical Report Diss. ETH No. 8918, ETH Zurich, CH-8092 Zurich/Switzerland, 1989. (in German).

[8] S. Matthys and T.C. Triantafillou. Shear and torsion strengthening with externally bonded FRP reinforcement. In A. Reality, E. Cosenza, G. Manfredi, and N. Nanni, editors, *Proceedings in the International Workshop on Composite in Construction*, pages 203–210, Capri, Italy, 2001.

[9] U. Meier. Bridge repair with high performance composite materials. *Material and Technik*, 15:125–128, 1987. (In German).

[10] A.S. Mosallam and S. Banerjee. Shear enhancement of reinforced concrete beams strengthened with FRP composite laminates. *Composites: Part B, Engineering*, 38(5-6):781–793, 2007.

[11] H. Rahimi and A. Hutchinson. Concrete beams strengthened with externally bonded FRP plates. *Journal of Composites for Construction, ASCE*, 5(1):44–56, 2001.

[12] V.P.V Ramana, T. Kant, S.E. Morton, P.K. Dutta, A. Mukherjee, and Y.M. Desai. Behavior of CFRPC strengthened reinforced concrete beams with varying degrees of strengthening. *Composites: Part B*, 31:461–470, 2000.

[13] T.C. Triantafillou. Shear strengthening of reinforced concrete beams using epoxy-bonded FRP composites. *ACI Structural Journal*, 95(2):107–115, 1998.

[14] T.C. Triantafillou and C.P. Antonopoulos. Design of concrete flexural members strengthened in shear with FRP. *Journal of Composites for Construction, ASCE*, 4(4):198–205, 2000.

[15] T.C. Triantafillou and N. Plevris. Flexural behavior of concrete structures strengthened with epoxy-bonded fiber reinforced plastics. In *International Seminar on Structural Repairs/Strengthening by the Plate Bonding Technique*, Univ. of Sheffield, England, 1990.

[16] T.C. Triantafillou and N. Plevris. Strengthening of R/C beams with epoxy-bonded fiber composite materials. *Materials and Structures*, 25:201–211, 1992.

[17] Z. Zhang and C-T.T. Hsu. Shear strengthening of reinforced concrete beams using carbon-fiber-reinforced polymer laminates. *Journal of Composites for Construction, ASCE*, 9(2):158–169, 2005.