Latin American Journal of Solids and Structures
www.lajss.org

Investigation of High-Speed Cryogenic Machining Based on Finite Element Approach

Abstract

The simulation of cryogenic machining process because of using a three-dimensional model and high process duration time in the finite element method, have been studied rarely. In this study, to overcome this limitation, a 2.5D finite element model using the commercial finite element software ABAQUS has been developed for the cryogenic machining process and by considering more realistic assumptions, the chip formation procedure investigated. In the proposed method, the liquid nitrogen has been used as a coolant. At the modeling of friction during the interaction of tools – chip, the Coulomb law has been used. In order to simulate the behavior of plasticity and failure criterion, Johnson-Cook model was used, and unlike previous investigations, thermal and mechanical properties of materials as a function of temperature were applied to the software. After examining accuracy of the model with present experimental data, the effect of parameters such as rake angle and the cutting speed as well as dry machining of aluminum alloy by the use of coupled dynamic temperature solution has been studied. Results indicated that at the cutting velocity of 10 m/s, cryogenic cooling has caused into decreasing 60 percent of tools temperature in comparison with the dry cooling. Furthermore, a chip which has been made by cryogenic machining were connected and without fracture in contrast to dry machining.

Keywords

Cryogenic Machining, finite element method (FEM), liquid nitrogen, coupled dynamic- thermal analysis.

Pooyan Vahidi Pashaki [a]
Milad Pouya [b]

[a] School of Mechanical Engineering, Islamic Azad University- science and research branch, Tehran, Iran, E-mail: cnc.calibration5@gmail.com
[b] School of Mechanical Engineering, International Pardis, University of Guilan, Rasht, Iran, Email: miladpouya5@gmail.com

http://dx.doi.org/10.1590/1679-78253493

Received 06.11.2016
In revised form 08.02.2017
Accepted 31.01.2017
Available online 09.02.2017

1 INTRODUCTION

In machining operations, mechanical energy, as a result of plastic deformation and friction is converting into thermal energy. This sudden increase in temperature results in a reduction of tool life, low quality of machined surfaces and additional charges. The cutting tools are an important factor in enhancing the efficiency of machining operations. Therefore, many researchers' have been done to

increase the life of cutting tools to meet industry requirements (Atlati et al. (2015), Buchkremer et al. (2015), Ducobu et al. (2015), Fu et al. (2016), Gao et al. (2015), Zhu et al. (2016)). Since experimental studies in the field of machining operation are costly, time-consuming and are limited so that, today researchers are using finite element methods as an efficient tool for their studies.

Most of the simulations aimed at obtaining the amount of residual stress and strain (Tounsi and El-Wardany (2015), Yang et al. (2016), Mahmoodi-k et al. (2014)), temperature distribution (Healy et al. (2015), Pittalà and Monno (2011)), and deformation of chip and predict the forces of machining (Khoshdarregi and Altintas (2013), Molnár et al. (2015), Wu et al. (2015). Yildiz et al. (2008), have been examined the studies in the field of cryogenic cooling method in machining processes and concluded that this approach can be used for various metals, including hard and soft metals, non-ferrous metals and non-metallic materials and composites. Zhan et al. (2011) simulated the formation of the chip and also examined the effect of cutting speed, the coefficient of friction and the rake angle by considering shear stress at the border area of chip and tool. Their results indicated that the cutting speed or higher feed rate is likely at the disruption of the chip. Cotterell and Byrne (2008), have studied the dynamics of chip formation in orthogonal machining of titanium alloy and demonstrated that disruption frequency of chip increased linearly with increasing cutting velocity. Pusavec (2012), has compared the machining of the tungsten of cryogenic method with the method of plastic injection and has considered its impact on some cutting parameters, cutting tool and the surface porosity. Then by using genetic algorithms has predicted values for the most optimal machining parameters. He also revealed that this method could be replaced by plastic injection method which has many environmental problems and physical hazards for the operator and will increase tools life and improve the performance of tools. Chen et al. (2004) have simulated the chip formation, cutting forces, stress, and strain and temperature distribution in orthogonal machining process by using a 2D finite element model. The Comparison of the obtained results in the case of cutting forces with the experimental results was satisfactory.

One of the biggest problems in machining processes is the generated temperature in material removal operations. This issue flares up at material discharges with high rigidity materials. The high temperature in machining can reduce tool life and dimensional accuracy and surface finish of the workpiece. An effective method to reduce machining temperatures is refrigeration cooling in which the liquid nitrogen is used as the coolant, usually. Various researchers by using the cryogenic method have examined the machining process in theory (Bajpai et al. 2015), Rana et al. (2016), Schoop et al. (2016), Umbrello et al. (2016)), and experiment (Biermann et al. (2015), Dinesh et al. (2016), Giasin et al. (2016), Gupta et al. (2016)). When cryogenic science is discussed, it is implied the use of refrigeration of fluids with lower temperatures than -150 ℃. To create such temperatures some permanent gasses is being used such as helium, hydrogen, neon, nitrogen, oxygen, which the boiling point of such gasses is below -180℃ (Hocheng 20110). Gupta et al. (2016) in the cutting of AISI 1040 steel concluded that the refrigeration cooling reduces 55 percent of tool wear. Jun in his studies on machining of AISI 1018 steel and Ti6Al4V alloy indicated that refrigeration cooling reduces friction as much as 20 to 30 percent (Jun (2005)). Dhananchezian and Kumar (2011) have investigated the changes in temperature of cutting tool by tungsten carbide cutting tools, at Ti6Zl4V machining by the dry and cryogenic method. Their results indicate that refrigeration cooling can reduce cutting temperature to 60 percent in comparison to dry machining. On the other hand, geometric error in

CNC machine tools can effect on machining process parameter, Pashaki and Pouya (2016) have developed volumetric error compensation in five-axis CNC machine tools to increase the accuracy of machined workpiece.

Examination of the further studies in recent years indicate that the cryogenic machining process diagonally so far has not been considered by researchers and parametric study on the effective parameters in this area is needed. Therefore, in this study, more realistic model of the simulation process is provided by the use of 2.5D finite element cryogenic machining based on Arbitrary Lagrangian-Eulerian (ALE) simulations. Johnson-Cook Plasticity Model for material plasticity model and failure criterion of Johnson-Cook is used to create the chip. Unlike conducted researches, in order to consider more realistic model, the finite element model has been provided more accurately and by taking into account the effect of temperature on mechanical properties of materials and using coupled dynamic-temperature analyzes the cryogenic process has been simulated. After ensuring the accuracy of the results, the effect of present parameters on the cryogenic machining process and cutting forces as well as stress distribution, temperature and plastic deformation and residual stress are discussed.

2 THE NUMERICAL MODEL AND CONSTITUTIVE RELATIONS

In the current research, a 2.5D finite element model by using the ABAQUS has been created to simulate the cryogenic machining. The analysis is performed by Lagrangian formulation and as an explicit dynamic. Since the machining is being performed diagonally, the tool possesses the angle of inclination. Tool angles have been represented in Fig. 1-a. Work piece and tools were defined both as deformable.

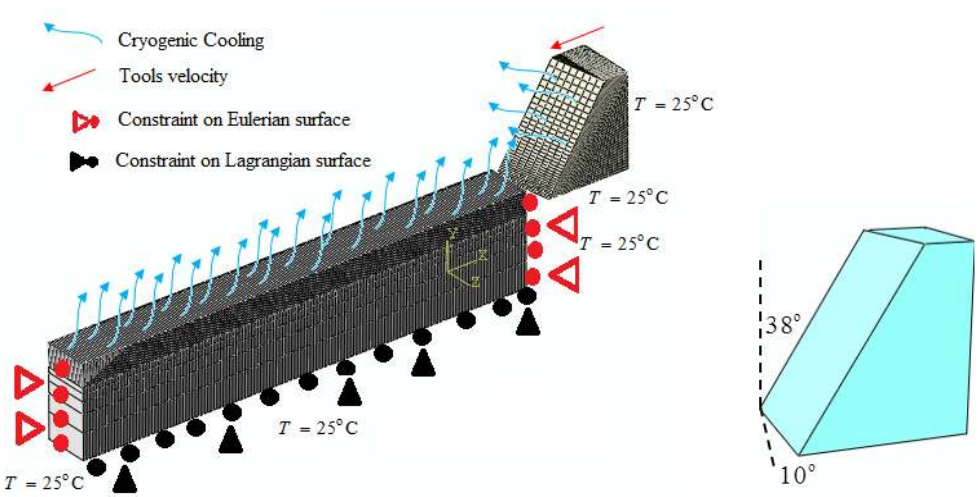

Figure 1: (a) Meshing and thermal boundary conditions of cryogenic machining operations and (b) the angles of cutting tool.

2.1 Cryogenic Cooling

In the present study cryogenic as spray cooling is examined. In this case, the cutting area particularly the contact surface of tool and chip with liquid nitrogen dispersion is being cooled by nozzles. At the finite element model, the cryogenic cooling impact on the workpiece is applied using convection heat transfer as follows:

$$\dot{q}_c = h_{cryo}(T - T_{room}) \tag{1}$$

Where in, h_{cryo} is the heat transfer coefficient, T is the surface temperature, and T_{room} is ambient temperature. Considering the aspects of heat transfer model, the temperature of the low surface and left side of workpiece same as an upper surface and right side of the cutting tools is considered equal to the ambient temperature T_{room} which is $25^{\circ}\mathrm{C}$. The upper surface and right side of the workpiece same as a lower surface and left the surface of removal material tools are under the influence of mandatory heat transfer. In Figure 1-a thermal boundary conditions have been represented. In the forced heat transfer surfaces by cryogenic cooling, the T_{room} temperature is to be considered $-196^{\circ}\mathrm{C}$ due to the use of liquid nitrogen. Also, to consider more realistic assumptions of cryogenic cooling, more details of convective heat transfer is desired. For this purpose, according to the study Miranda (2013) heat transfer coefficient was considered as follows:

$$h_{cryo} = \frac{0.2}{e^{0.35} g^{0.33}} \frac{V_f^{0.65} k_f^{0.67} c_p^{0.33} \gamma_f^{0.33}}{v_f^{0.32}} \tag{2}$$

where e is the equivalent length, g gravity acceleration and other parameters are as follows: V_f speed $(\mathrm{m\,s^{-1}})$, k_f thermal conductivity $(\mathrm{W\,m^{-1}\,^{\circ}C})$, γ_f density $(\mathrm{kg\,m^{-3}})$, v_f dynamic viscosity $(\mathrm{Pa\,s})$ and c_p specific heat capacity $(\mathrm{J\,kg^{-1}\,^{\circ}C})$.

According to equation (2) and taking into account the physical and thermal properties of liquid nitrogen, heat transfer coefficient is a function of temperature which is achieved as follows:

$$h_{cryo} = -8\times10^{-6}T^3 - 0.0149T^2 + 44.396T + 10162 \tag{3}$$

2.2 Plastic Criterion of Johnson-Cook

The material of tool and workpiece are considered steel aluminum respectively. To modeling of the plastic behavior of materials, Johnson-Cook Plasticity model is used. According to this model, the plastic behavior of materials is expressed as the below equation:

$$\sigma = (A + B\,\varepsilon^n)\left[1 + C\,\ln\left(\frac{\dot{\varepsilon}}{\dot{\varepsilon}_0}\right)\right]\left[1 - \left(\frac{T - T_{\mathrm{room}}}{T_{\mathrm{melt}} - T_{\mathrm{room}}}\right)^m\right] \tag{4}$$

In this regard, the first term represents the rate of strain hardening; the second term represents the flow of stress at high strain rates and in the third term is defined the softening rate of materials under material removal. Parameters A, B, c, n and m are material constants that have been extracted from the tables of Materials Engineering and have been represented in Table 1(Davim and Ma-ranhão

2009). When Johnson-Cook model of dependent on the strain rate is being used the values of $\dot{\varepsilon}_0$ and C should be determined.

2.3 Exhaustion Criterion of Johnson-Cook

For modeling of the chip formation, failure criterion of Johnson-Cook model is being used. Based on this test, deterioration parameter D in the equation (5) is defined which as should not exceed from number 1.

$$D = \sum \frac{\Delta \varepsilon^{pl}}{\varepsilon_f^{pl}} \tag{5-a}$$

$$\varepsilon_f^{pl} = \left[d_1 + d_2 \exp(d_3 \frac{p}{q}) \right] \left[1 + d_4 \ln\left(\frac{\varepsilon^{pl}}{\dot{\varepsilon}_0} \right) \right] \left(1 + d_5 \frac{T - T_{\text{room}}}{T_{\text{melt}} - T_{\text{room}}} \right) \tag{5-b}$$

In the recent equation, ε_f^{pl} is failure strain p is pressure and q is effective stress of Von-Mises. d_i, $(i = 1,2,...,5)$ are material constants, which values are represented in Table 2 for steel tool and aluminum workpieces.

2.4 Model of Coulomb Friction

The central concept of Coulomb friction pattern is the allowed maximum tangential friction (shear) on the length of the contact surface up to the contact pressure between the contact bodies. In this paper, the resistance model between the shared surface of the tool and the workpiece is defined by using Coulomb criterion. In this case, the frictional stress τ is considered as proportional to the normal tension σ_n. Coulomb friction model is defined as follows:

$$\tau = \mu \sigma_n \tag{6}$$

In which μ is considered as the friction coefficient.

2.5 Meshing and Arbitrary Lagrangian-Eulerian (ALE) Simulations

In the chip formation process due to the high range of deformation, there is a lot of error associated with simple meshing process. In this study, the Adaptive Meshing method is used. The full name of the method is used; the Arbitrary Lagrangian-Eulerian method is conventional that it is more commonly referred to as ALE. According to the dynamic-temperature coupling analysis for meshing, 3D elements C3D8T that is an eight-node thermal coupled element is used. The surface of material removal with the depth of 1 mm with smaller features has meshed and other parts with larger elements. Boundary conditions and used meshing method is represented in Figure 1.

2.6 Mechanical and Thermal Properties of Used Materials

Respectively in Tables 1 and 2, variables of plasticity and failure of Johnson-Cook models are presented. As noted in this study, for taking into account more realistic assumptions, given that the

temperature of the workpiece during the machining process and tools increase extremely high, therefore, unlike the previous researches, mechanical and thermal properties of materials are considered as a function of temperature. The used thermal and mechanical properties for Al and AISI 316L at different temperatures are provided in Tables 3 and 4 respectively.

	A (MPa)	B (MPa)	n	C	m	T_{melt} (^oC)	T_{room} (^oC)	$\dot{\varepsilon}_0$
Al (Umbrello et al. 2007)	324.1	113.8	0.426	0.002	0	926	20	1
AISI 316L (Umbrello et al. 2007)	305	1161	0.613	0.01	0.517	1460	20	1

Table 1: The values of variables of equation of Johnson-Cook Plasticity Model.

	d_1	d_2	d_3	d_4	d_5
Al	-0.77	1.45	-0.47	0	0
AISI 316L	0.25	4.38	2.68	0	0

Table 2: The values the constant equation of Johnson-Cook failure model.

T (K)	Cp (J kg^{-1} K^{-1})	K (W m^{-1} K^{-1})	E (GPa)	Poisson's ratio
300	789.19	37.06	380	0.270
400	939.53	28.19	375	0.272
500	1019.86	21.81	371	0.272
600	1071.45	17.23	366	0.276
700	1109.48	13,93	362	0.277
800	1140.34	11.56	357	0.279
900	1166.86	9.86	353	0.281
1000	1190.84	8.65	348	0.283
1100	1213.11	7.75	343	0.285
1200	1234.65	7.12	339	0.287
1300	1254.76	6.66	334	0.289

Table 3: The thermal and mechanical properties of the used aluminum in the simulation (Yilbas et al. 2016).

AISI 316L steel[32]	Density (kg m^{-3}): $\rho(T) = 7921 - 0.614\,T + 0.0002\,T^2$
	Thermal conductivity (W m^{-1} K^{-1}): $k(T) = 14.307 + 0.0181\,T - 6\times10^{-6}T^2$
	Specific heat (J kg^{-1} K): $c_p(T) = 440.79 + 0.5807T - 0.001\,T^2 + 7\times10^{-7}T^3$

Table 4: The mechanical and thermal properties of used AISI 316L in simulation.

3 RESULTS AND DISCUSSION

In the present study the cryogenic machining of aluminum with the standard cutting tool are modeled and the impact of different parameters like cutting speed, rake angle and friction are examined. The first step is to verify the authenticity of the presented results, simulation results and Comparison of them to experimental results of Ref. (Günay, 2005). In Figure 2 the obtained cutting force values

from simulation and experimental analysis are represented. As can be seen, the simulation outcomes have an acceptable agreement with experimental results presented in Ref. (Günay, 2005) and the maximum predicted error of the model is less than 8 percent. Although there are differences between experimental and numerical results, but the error rate due to the uncertainty of coefficients related to the behavior of the material, is acceptable.

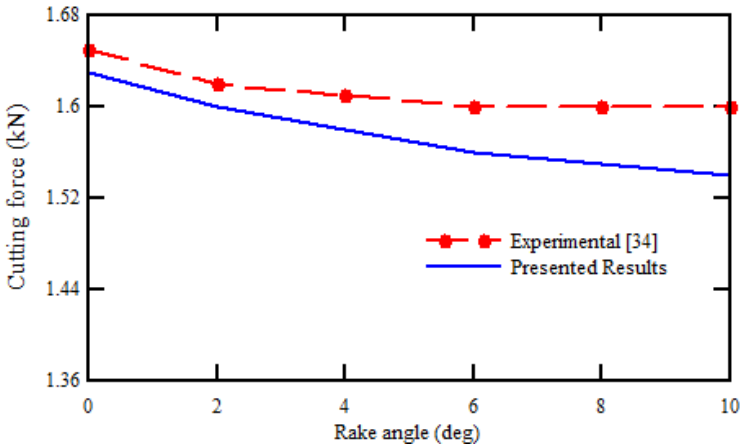

Figure 2: Compares the obtained mechanical cutting force by the use of the presented model and the experimental results of Ref. (Günay, 2005).

Afterward, by assuring the reliability of the conducted modeling, to evaluate the changes of any of the practical parameters, the length of the chip has been measured in ABAQUS software and according to this measure, the results were compared.

3.1 The Effect of Cryogenic Cooling

At first, for more considerations over the effects of the cryogenic process on the machining operations. In figure 3 the temperature distribution of the workpiece and cutting tool for rake angle of 32o and cutting edge inclination angle of 10o in machining with cutting speed of 10 m/s for both cooling, dry and cryogenic cooling is represented. Also in these figures, the effect of consideration of thermal stress on the geometrical shape of the chip and residual stress have been represented. By comparing Fig. 3-a and 3-b it can be found that the dynamic resolution without considering the thermal tensions, first the length of the chip is lower and second less residual strain has been received. According to the results of the conducted analysis of machining, the coupled dynamic analysis of displacement-thermal should be used.

In Figures 4 and 5 temperatures distribution in the machining work piece and tool for both of the dry and cryogenic machining are compared at cutting speed of 10 m/s. As can be seen during machining, heat arises in the primary and secondary deformation areas, and the maximum temperature in the contact surfaces of tool and chip is created. Results indicated in cutting speed of 10m/s in cryogenic machining respectively causes in the reduction of 71.34 and 76.64 percent of the temperature of the chip and tool in comparison with dry machining.

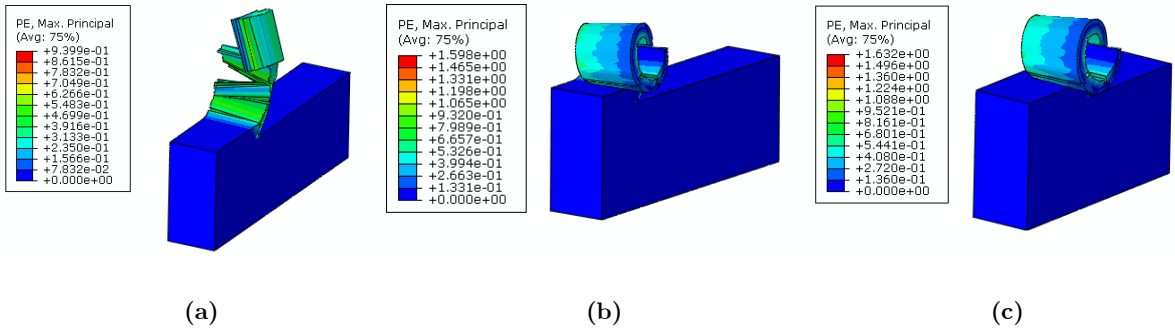

Figure 3: Compares the residual strain distribution and chip shapes **(a)** dynamic analysis, **(b)** thermal-dynamic coupled analysis in dry machining and **(c)** thermal-dynamic coupled analysis in cryogenic machining.

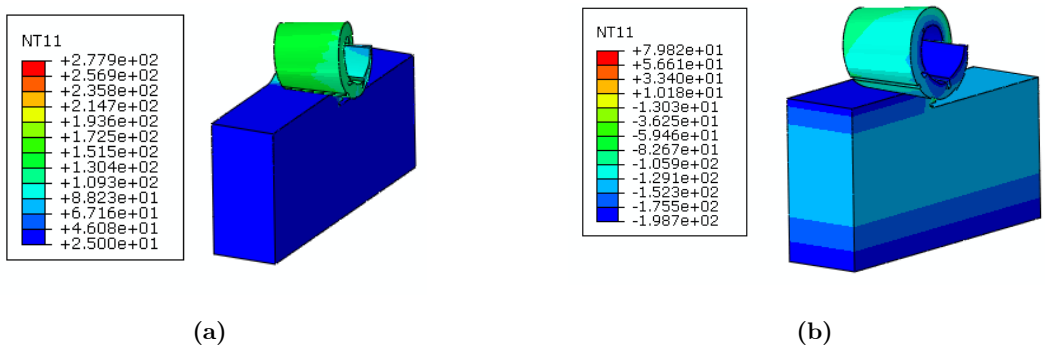

Figure 4: The temperature (K) distribution of machining of work piece in two modes (a) dry machining and (b) cryogenic machining.

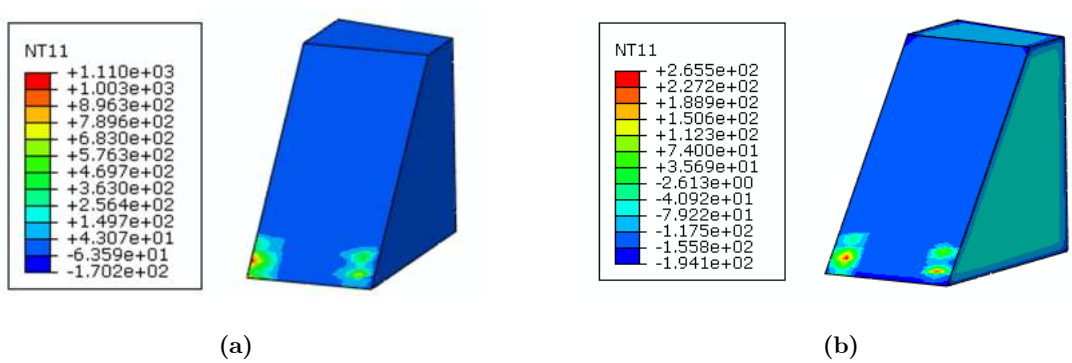

Figure 5: The distribution of tools temperature (K) in two modes **(a)** dry machining and **(b)** cryogenic machining.

In Figure 6, the residual stress distribution in cutting speed of 10 m/s is represented for both dry and cryogenic machining. According to the figure 6, it is observed that the high created temperatures in thermal gradient creates a residual stress. Also, in the machining process by contact of the tip of the tool to the chip formation area these stress gradually become tensile stress. The results represent

that compressive and tensile residual stress of cryogenic machining in this case approximately is 20.12 and 24.39 percent lower than dry machining that the reason of it can be the low temperature of cryogenic machining and as a result, causes in low thermal stress. It is indicated that in both cases, the maximum compressive stress is at the contact zone of the tool and the workpiece and the area of the second shear due to high heat transfer and more thermal gradient, these stress are tensile.

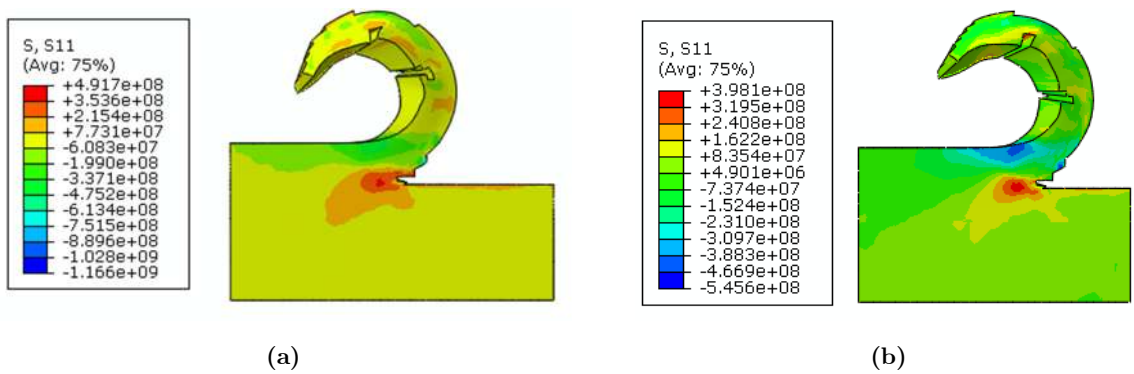

Figure 6: The distribution of residual stress (Pa) in two modes (a) dry machining and (b) cryogenic machining.

3.2 The Effect of Rake Angle

According to released data by Materials Association of America, the chip angle of the tool at cutting aluminum alloys with the ability of low machining (grades C, D and E) is about 30 to 40 degrees. For this reason and to observe the effect of the angle of the chip in chip formation, machining process is considered with three different rake angles of 32, 38 and 42°. In this case the cutting speed is considered to be constant as 30 m/s, cutting depth 0.5 mm and the angle of inclination 10°. Figure 7 residual stress distribution of the piece is represented in dry and cryogenic for different angles of material removal. The results indicate that in dry machining for low rake angles, chip will be formed broken. At the angle of 32° of the chip, the lengths of chip are averagely 23.4 mm and by increasing the angle of material removal, connected chip is formed. So for an angle of 42° chip are created without a break. It should be noted that by increasing the rake angle the contact between the chip and tool is reduced and thus the generated compressive stress increases at the tip of the tool. It should be considered that the tensile stress is the highest amount for material removal tools with an angle of 38°. The main point should be noted is that, according to the figure 7, the difference between dry machining and cryogenic method is that, in cryogenic machining in contrast to dry machining the chip is formed connected. According to figure 8, the temperature distribution of the workpiece in cryogenic machining is indicated, it can be seen the temperature of the chip in the cryogenic machining decreases to 50% in comparison to the dry machining and rake angle 38 degrees more indicates the generated temperature.

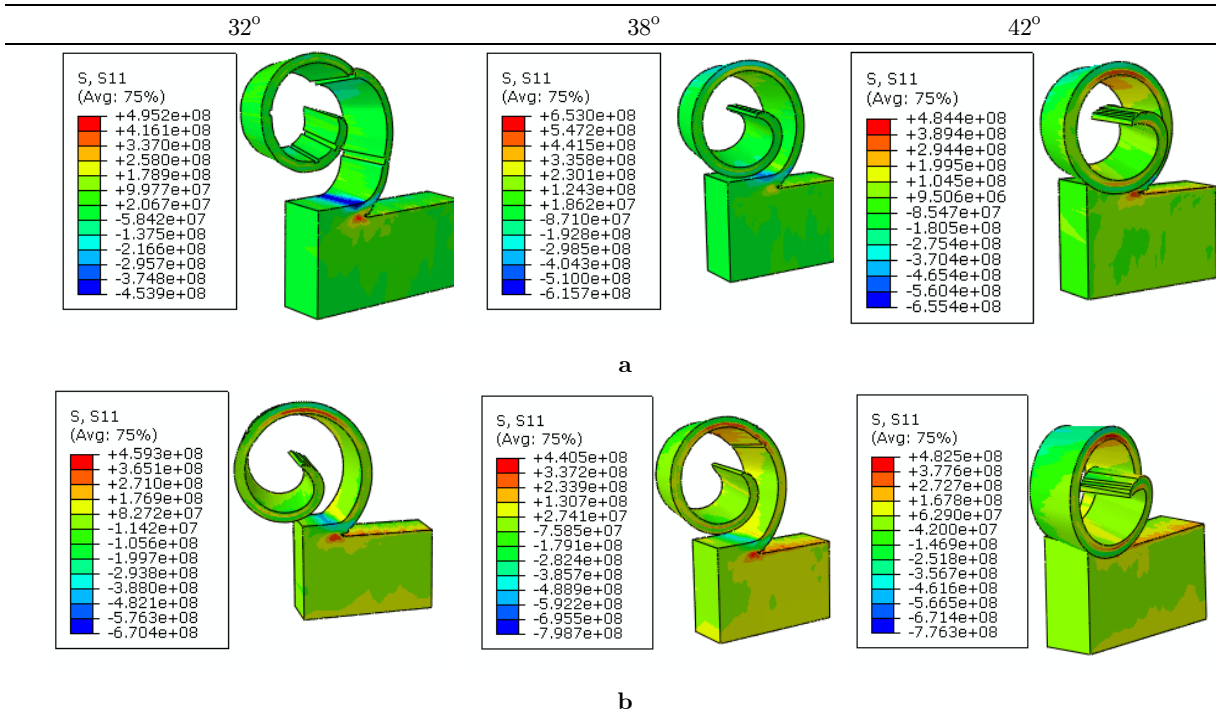

Figure 7: The distribution of residual stress (Pa) in **(a)** dry machining and **(b)** cryogenic machining in different rake angles in cutting speed of 30 m/s.

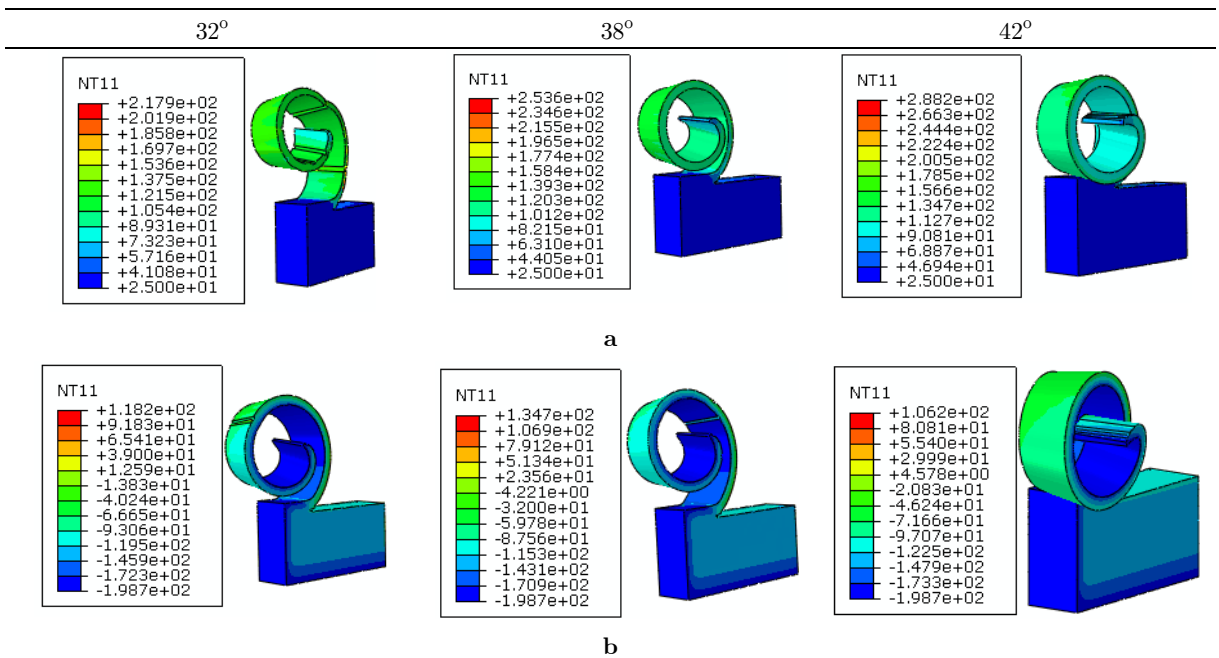

Figure 8: The temperature (K) distribution in **(a)** dry machining and **(b)** cryogenic machining at different rake angles in cutting speed of 30 m/s.

3.3 The Cutting Speed Effect

Three various speeds of 10, 30 and 60 m/s have been studied to investigate the impact of cutting speed on chip features. The depth of cut and angle of inclination of tools is considered to be fixed and respectively equal to 0.5 mm and 10 degrees. In figure 9 the impact of cutting speed on the formation of the chip is represented in cryogenic machining process and different rake angles. The results represent that at low cutting speeds, the chip are conical and by speeding up the chip are more open and lose the conical shape. It can be said the most conical formation of the chip and disconnection of the newly formed chip with previous chip causes in increasing the length of the chip and reduces the break in them. According to figures also it is observed that at speeds of 10 and 30 m/s the increasing of the rake angle causes the reduction of residual plastic strains in the chip, but at higher speeds (60 m/s) the greatest strain occurs in the chip for the angle of 38 degrees.

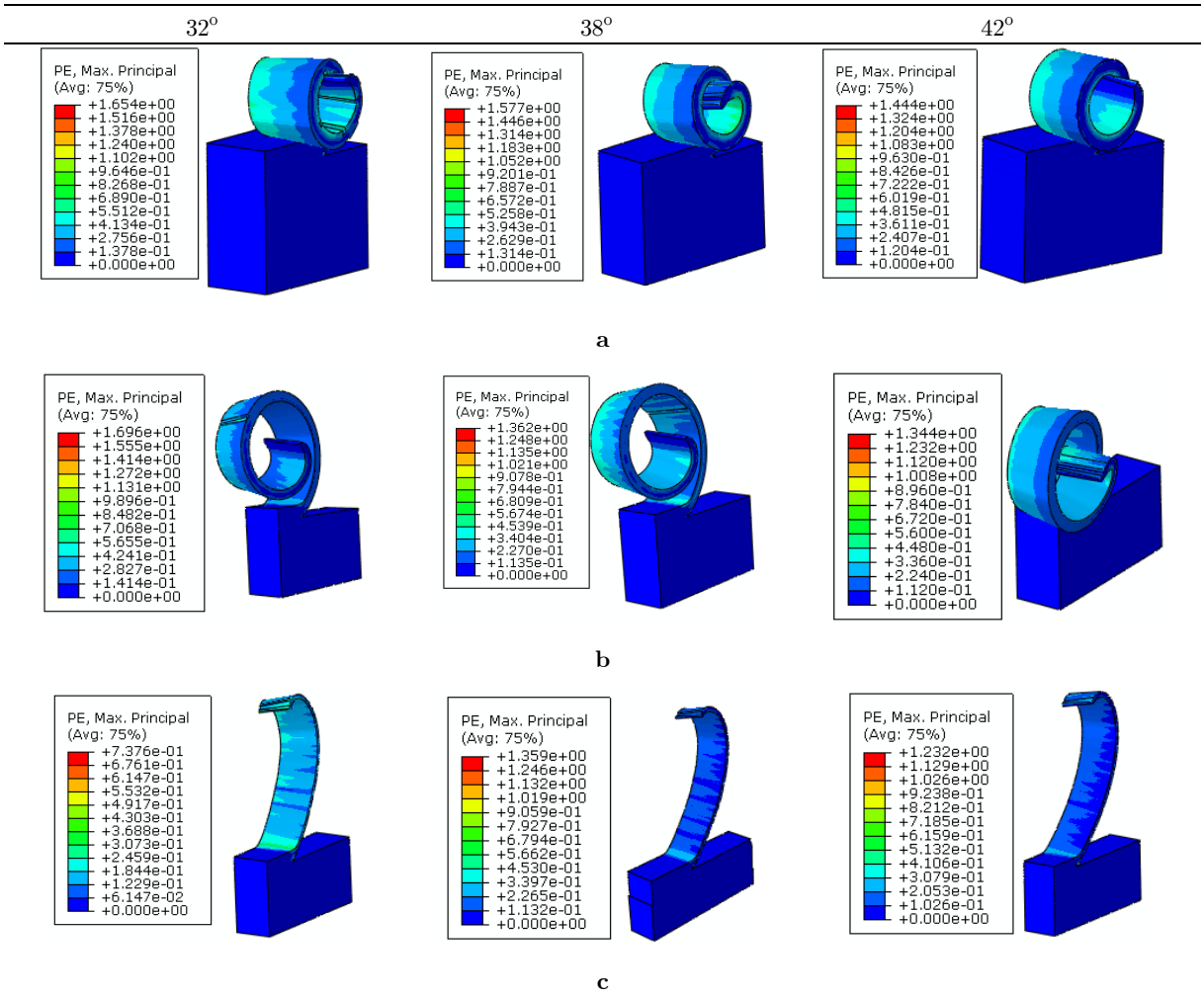

Figure 9: chip formation processes in the cryogenic machining for different rake angles in speeds of material removal for (a) 10 m/s, (b) 30 m/s and (c) 60 m/s.

4 CONCLUSION

In the machining process using cooling increases tool life, dimensional accuracy, and makes to better roughness which cause reduction of temperature and energy consumption and leads to improved productivity. Therefore, in this study, the finite element model is considered for oblique cutting with cryogenic cooling. To simulate material removal process and separation of chip, the plastics criterion materials as well as material damage, the Johnson-Cook model was used, and mechanical and thermal behavior of materials were applied as a function of temperature. After analyzing the simulated model by using coupled thermal-dynamic solutions model, the impact of parameters such as the speed of material removal, rake angle on residual stress and shape of the chip and also comparison of the results with dry and cryogenic machining have been considered. The results represent that applying thermal and mechanical loads in the workpiece during the machining process, in fluencies the residual stress and tensile stress distribution in the cryogenic process is more than dry machining and this fact on at residual stress on compression is vice versa. At the cutting speed of 10 m/s in cryogenic machining respectively causes in the reduction of 71.34 and 76.64 percent of temperature of the chip and tool in comparison to dry machining. It is observed that temperature of the chip in cryogenic machining is 50% reduces to dry machining and rake angle of 38 degrees shows more the generated temperature. The results also represent that the chip formed in cryogenic machining to be connected and without a fracture, unlike the dry machining. However, at speeds of less than 30 m/s shape of the chip are conical, and at high speeds has been created strips. Also, as the rake angle increases the conical shape of chip reduces.

References

Atlati, S., Haddag, B., Nouari, M and Moufki A., (2015). Effect of the local friction and contact nature on the Built-Up Edge formation process in machining ductile metals. Tribology International 90: 217-27.

Bajpai, V., Lee, I and Park, H.W., (2015). FE Simulation of Cryogenic Assisted Machining of Ti Alloy (Ti6AI4V). ASME 2015 International Manufacturing Science and Engineering Conference. American Society of Mechanical Engineers V001T02A28-VT02A28.

Biermann, D., Abrahams, H., Metzger, M., (2015). Experimental investigation of tool wear and chip formation in cryogenic machining of titanium alloys. Advances in Manufacturing 3: 2-9.

Buchkremer, S., Klocke, F and Lung, D., (2015). Finite-element-analysis of the relationship between chip geometry and stress triaxiality distribution in the chip breakage location of metal cutting operations. Simulation Modelling Practice and Theory 55: 10-26.

Chen, S.J., Pang, Q., Cheng, K., (2004). Finite element simulation of the orthogonal metal cutting process. Materials Science Forum. Trans Tech Publ 582-586.

Cotterell, M., Byrne, G., (2008). Dynamics of chip formation during orthogonal cutting of titanium alloy Ti–6Al–4V. CIRP Annals-Manufacturing Technology 57: 93-96.

Davim, J., Maranhão, C., (2009). A study of plastic strain and plastic strain rate in machining of steel AISI 1045 using FEM analysis. Materials & Design30: 160-165.

Dhananchezian, M., Kumar, M.P., (2011). Cryogenic turning of the Ti–6Al–4V alloy with modified cutting tool inserts. Cryogenics 51: 34-40.

Dinesh, S., Senthilkumar, V. and Asokan, P., (2016) Experimental Studies on Cryogenic Machining of Bio-Degradable ZK60 Mg Alloy Using Micro-Textured Tools. Materials and Manufacturing Processes.

Ducobu, F., Rivière-Lorphèvre, E. and Filippi, E., (2015). Experimental contribution to the study of the Ti6Al4V chip formation in orthogonal cutting on a milling machine. International Journal of Material Forming 8: 455-468.

Fu, X., Chen, G., Yang, Q., Sun, Z. and Zhou, W., (2016). The influence of hydrogen on chip formation in cutting Ti-6Al-4V alloys. The International Journal of Advanced Manufacturing Technology 1-5.

Gao, Y., Wang, G., Bermingham, M.J. and Dargusch, M.S., (2015). Cutting force, chip formation, and tool wear during the laser-assisted machining a near-alpha titanium alloy BTi-6431S. The International Journal of Advanced Manufacturing Technology 79: 1949-1960.

Giasin, K., Ayvar-Soberanis, S. and Hodzic, A., (2016). Evaluation of cryogenic cooling and minimum quantity lubrication effects on machining GLARE laminates using design of experiments. Journal of Cleaner Production 135: 533-548.

Günay, M., (2015). Experimental investigation of the effect of cutting tool rake angle on main cutting force. Journal of materials processing technology 166(1): 44-49.

Gupta, M.K., Singh, G. and Sood, P.K., (2015). Experimental investigation of machining AISI 1040 medium carbon steel under cryogenic machining: A comparison with dry machining. Journal of The Institution of Engineers (India): Series C 96: 373-379.

Healy, C., Koch, S., Siemers, C., Mukherji, D. and Ackland, G.J., (2015). Shear melting and high temperature embrittlement: theory and application to machining titanium. Physical review letters 144: 165-176.

Hocheng, H., (2011). Machining technology for composite materials: principles and practice. Elsevier.

Jun, S-C., (2005). Lubrication effect of liquid nitrogen in cryogenic machining friction on the tool-chip interface. Journal of mechanical science and technology 19: 936-946.

Khoshdarregi, M.R. and Altintas, Y., (2015). Generalized modeling of chip geometry and cutting forces in multi-point thread turning. International Journal of Machine Tools and Manufacture 98: 21-32.

Mahmoodi-k, M., Davoodabadi, I., Višnjić, V., Afkar, A., (2014). Stress and dynamic analysis of optimized trailer chassis, Tehnički vjesnik, 21: 599-608

Miranda, R., (2013). Metalworking fluids (MWFs) for cutting and grinding–Fundamentals and recent advances. International Journal of Environmental Studies 70: 337-341.

Molnár, T.G., Insperger, T., Hogan, S.J. and Stépán, G., (2015). Investigating multiscale phenomena in machining: the effect of cutting-force distribution along the tool's rake face on process stability. ASME 2015 International Design Engineering Technical Conferences and Computers and Information in Engineering Conference. American Society of Mechanical Engineers 63-83.

Pashaki, P. and Pouya, M., (2016). Volumetric error compensation in five-axis cnc machining center through kinematics modeling of geometric error, advances in science and technology research journal 10: 207-217.

Pittalà, G.M. and Monno, M., (2011). A new approach to the prediction of temperature of the workpiece of face milling operations of Ti-6Al-4V. Applied Thermal Engineering 31: 173-180.

Pusavec, F., (2012). Porous tungsten machining under cryogenic conditions. International Journal of Refractory Metals and Hard Materials 35: 84-89.

Rana, K., Rinaldi, S., (2016). Imbrogno S, et al. 2D FE Prediction of Surface Alteration of Inconel 718 under Machining Condition. Procedia CIRP 45: 227-230.

Schoop, J., Ambrosy, F., Zanger, F., Schulze, V., Balk, T. and Jawahir, I., (2016). Cryogenic machining of porous tungsten for enhanced surface integrity. Journal of Materials Processing Technology 229: 614-621.

Tounsi, N. and El-Wardany, T., (2015). Finite element analysis of chip formation and residual stresses induced by sequential cutting in side milling with microns to sub-micron uncut chip thickness and finite cutting edge radius. Advances in Manufacturing 3: 309-322.

Umbrello, D., Caruso, S. and Imbrogno, S., (2016). Finite element modelling of microstructural changes in dry and cryogenic machining AISI 52100 steel. Materials Science and Technology 1-9.

Umbrello, D., M'saoubi, R. and Outeiro, J., (2007). The influence of Johnson–Cook material constants on finite element simulation of machining of AISI 316L steel. International Journal of Machine Tools and Manufacture 47: 462-470.

Wu, X., Li, L., He, N., Zhao, M. and Zhan, Z., (2015). Investigation on the influence of material microstructure on cutting force and bur formation in the micro cutting of copper. The International Journal of Advanced Manufacturing Technology 79: 321-327.

Yang, D., Liu, Z., Ren, X. and Zhuang, P., (2016). Hybrid modeling with finite element and statistical methods for residual stress prediction in peripheral milling of titanium alloy Ti-6Al-4V. International Journal of Mechanical Sciences 108: 29-38.

Yilbas, B., Akhtar, S. and Karatas, C., (2016). Laser machining of different diameter holes in alumina ceramic: Thermal stress analysis. Machining Science and Technology 20: 349-367.

Yildiz, Y. and Nalbant, M., (2008). A review of cryogenic cooling in machining processes. International Journal of Machine Tools and Manufacture 48: 947-964.

Zhang, Y., Mabrouki, T., Nelias, D. and Gong, Y., (2011). Chip formation in orthogonal cutting considering interface limiting shear stress and damage evolution based on fracture energy approach. Finite Elements in Analysis and Design47: 850-863.

Zhu, Z., Sun, J., Li, J. and Huang, P., (2016). Investigation on the influence of tool wear upon chip morphology in end milling titanium alloy Ti6Al4V. The International Journal of Advanced Manufacturing Technology. 83: 1477-85.