Latin American Journal of Solids and Structures
www.lajss.org

Vibration analysis of stiffened plates using Finite Element Method

Abstract

This paper presents the vibration analysis of stiffened plates, using both conventional and super finite element methods. Mindlin plate and Timoshenko beam theories are utilized so as to formulate the plate and stiffeners, respectively. Eccentricity of the stiffeners is considered and they are not limited to be placed on nodal lines. Therefore, any configuration of plate and stiffeners can be modeled. Numerical examples are proposed to study the accuracy and convergence characteristics of the super elements. Effects of various parameters such as the boundary conditions of the plate, along with orientation, eccentricity, dimensions and number of the stiffeners on free vibration characteristics of stiffened panels are studied.

Keywords

vibration, stiffened plates, Finite Element Method, super element.

Shahed Jafarpour Hamedani[a], **Mohammad Reza Khedmati**[b,*] **and Saeed Azkat**[c]

[a] M.Sc. Student, Faculty of Marine Technology, Amirkabir University of Technology, Tehran 15914 – Iran
[b] Associate Professor, Faculty of Marine Technology, Amirkabir University of Technology, Tehran 15914 – Iran
[c] Head of Maintenance and Planning Department, Iranian Offshore Oil Company, Tehran 1966664791– Iran

Received 12 Mar 2011;
In revised form 08 Feb 2012

* Author email: khedmati@aut.ac.ir

1 INTRODUCTION

Noise and vibration control is an increasingly important area in the most fields of engineering. There are many vibrating parts in structures of ships, aircrafts and offshore platforms. The amplitude of their motions can be large due to the inherently low damping characteristics of these structures. Such noise is commonly eradicated by use of heavy viscoelastic damping materials which lead to increase in cost and weight. Vibration isolators between pieces of equipment and their supporting structures can be another solution. Clearly, isolating large structures can be difficult, expensive and in some cases, such as the wings of an aircraft, almost impossible. In recent years, much attention has been focused on active noise control of structures. However, their installation and maintenance can be expensive, so possible passive solutions would be preferable [20].

In the case of plates/shells, one common and cost effective approach in order to improve their NVH[1] performance is to add stiffeners. Stiffened plates are lightweight, high-strength

[1] Noise Vibration Harshness

structural elements, commonly used in ships, aircrafts, submarines, offshore drilling rigs, pressure vessels, bridges, and roofing units [19, 21]. Most of these structures are required to operate in dynamic environments. Therefore, a thorough study of their dynamic behavior and characteristics is essential in order to develop a perfect strategy for modal vibration control [8]. The stiffeners enhance the rigidity of base structures by increasing their cross sectional second moment of inertia. The configuration of the stiffeners should be consistent with the natural modes likely to be excited by the service loads, so as to arrive at a design with a high strength-to-weight ratio [4]. In general, the stiffening of the structures is applied, because of two main reasons: Increasing load carrying capacity and preventing buckling, especially in the case of in-plane loading [6].

Different geometries of stiffened shells have been studied in the literature which can be categorized into three groups including plates, single curved shells, and double curved shells. The Superimposition of the stiffeners with respect to the plate mid-plane, i.e. eccentric or concentric is also a matter of concern for the structural analysts. The stiffener of which, centroid is coincident with the plate/shell mid-surface, is called concentric, otherwise eccentric stiffener [16].

The analysis of stiffened plate vibration has been the purpose of numerous investigations. Among the known solution techniques, the finite element method is certainly the most favourable. Olson and Hazell [14] predicted and measured the first 24 eigenfrequencies of stiffened plates using FEM and real-time laser holography. Mustafa and Ali [12] developed an eight-noded orthogonally stiffened super finite element to study the free vibration of a stiffened cylindrical shell with diaphragm ends. Experimental measurements of natural frequencies and mode shapes of an orthogonally stiffened shell were also carried out to substantiate theoretical predictions. A plate with centrally placed stiffener has been studied by Mukherjee and Mukhopadhyay [11]. An isoparametric stiffened plate element has been utilized in their analysis considering shear deformation in order to analyse thick as well as thin plates. In the proposed formulation, the stiffeners can be placed anywhere within the plate element and they are not required to necessarily follow the nodal lines. Koko and olson [9] have developed another super element to model the free vibration of stiffened plates. This super element allows a coarser mesh (at the expense of more complex interpolation functions), so that only a single element per bay or span is needed. Sinha and Mukhopadhyay [18] investigated stiffened shells utilizing a high-precision triangular shallow shell element in which stiffeners can be anywhere within the plate element. The vibration analysis of stiffened plates has been investigated by Barrette and Beslin [3] using hierarchical finite elements with a set of local trigonometric interpolation functions. Nayak and Bandyopadhyay [13] presented a finite element analysis for free vibration behaviour of doubly curved stiffened shallow shells. The eight-/nine-node doubly curved isoparametric thin shallow shell elements along with the three-node curved isoparametric beam element has been used in this study. Their Formulation suffers from the limitation, that stiffeners can only be placed along nodal lines in x or y directions. Two years later Samanta and Mukhopadhyay [17] developed a new 3 noded stiffened shell element and applied it in determining natural frequencies and mode shapes of the different stiffened structures.

Another Stiffened element with seven degrees of freedom per node has been presented by voros [21]. Torsion–flexural coupling, torsional warping effect and the second- order terms of finite rotations have been considered in this investigation.

In the present work, four different elements including two conventional and two super elements [2] have been used so as to predict the dynamic characteristics of stiffened panels. The formulation of the plate and stiffeners are both based on the first order shear deformation theories so it can be applicable to both thin and thick plates. In the proposed formulation, the stiffeners are modeled in such a way that they can be placed anywhere within the plate element. This may be considered as a prominent advantage over most of approximate analyses, since this method can be applied to any plate and stiffeners configuration. It is worth to mention that, the shape function of the plate is also used to express the displacement of the stiffener at any generic point along it. In this way, displacement compatibility between the plate and the stiffeners is ensured automatically in the whole continuum and no additional node is utilized for the stiffeners.

After studying the accuracy and convergence of super elements, they have been utilized to investigate different problems. Because of significantly less time and fewer global DOFs needed for super elements, they are useful for preliminary designs and parametric studies; where, repeated calculations are often required. Effects of various parameters such as the orientation, eccentricity and number of stiffeners on free vibration characteristics have been studied. These examples demonstrate the strength of the developed formulation, and it is hoped that the results presented will prove useful to other researchers. Up to authors' knowledge, such results have not been published before.

2 FORMULATION

The equation of motion for free vibration of elastic bodies, with infinitesimal displacements is:

$$[\mathrm{M}]\left\{\ddot{d}\right\} + [\mathrm{K}]\{d\} = \{0\}, \tag{1}$$

Where [M] and [K] is overall mass and stiffness matrix, respectively. $\{d\}$ is the displacement vector and dots denote derivatives with respect to time. Overall matrices in equation (1) are obtained by assembling matrices corresponding to each element, and applying appropriate boundary condition. In this paper, the following hypotheses are made:

- The material of the plate and the stiffeners is isotropic, linear elastic and Hookian.
- In-plane displacements are neglected in order to reduce the computational time. If the plate edges are immovable in the plane, the in-plane displacements will be much smaller than out-of-plane ones. Therefore, in such cases this can be a rational assumption.
- Stresses in the direction normal to the plate middle surface are negligible.
- Normal to the undeformed mid-plane remains straight and unstretched in length, but not necessarily normal to the deformed mid-plane. This assumption implies the consideration

of shear deformation, but it also leads to the nonzero shear stresses at the free surface, because of constant shear stress through the plate thickness.

- Rotary inertia effect is included.
- The magnitude of transverse deflection (w) is small in comparison to the plate thickness (h).

Stiffness and mass matrices corresponding to each element are the summation of the plate stiffness and mass matrices, and the contributions of stiffeners to this element as

$$[\mathrm{K}] = [\mathrm{K_p}] + [\mathrm{K_s}], \tag{2}$$

$$[\mathrm{M}] = [\mathrm{M_p}] + [\mathrm{M_s}], \tag{3}$$

in which plate and stiffener are denoted by subscripts p and s, respectively [5, 7, 10].

2.1 Plate element

A flat, thin/thick plate of uniform thickness is considered. As it was assumed, constitutive material is homogeneous, linear elastic and Hookian. For the purpose of finite element modeling 4 types of element are used, including eight-/nine-node conventional elements and eight-/twelve-node super elements. Each node has 3 degrees of freedom. They consist of one displacement in transverse direction, and two rotations about x-axis and y-axis. Displacement at each point within the element is related to nodal values by

$$\left\{ \begin{array}{c} w \\ \theta_x \\ \theta_y \end{array} \right\} = \sum_{\mathrm{i}=1}^{\mathrm{n}} N_i \left\{ \begin{array}{c} w_i \\ \theta_{xi} \\ \theta_{y_i} \end{array} \right\}, \tag{4}$$

where i and n are the corresponding node and total number of nodes in a the plate element, and N_i is the shape function of the ith node. In the isoparametric formulation the above functions are used for defining the displacement as well as the location of any point within the element in terms of nodal coordinates.

$$\left\{ \begin{array}{c} \mathrm{x} \\ \mathrm{y} \end{array} \right\} = \sum_{\mathrm{i}=1}^{\mathrm{n}} \mathrm{N_i} \left\{ \begin{array}{c} \mathrm{x_i} \\ \mathrm{y_i} \end{array} \right\}, \tag{5}$$

Implementing Mindlin plate theory, displacement filed can be expressed as follow (figure 1)

$$\left\{ \begin{array}{c} U \\ \mathrm{V} \\ \mathrm{W} \end{array} \right\} = \left\{ \begin{array}{c} -\mathrm{z}\theta_y \\ -\mathrm{z}\theta_x \\ w \end{array} \right\}. \tag{6}$$

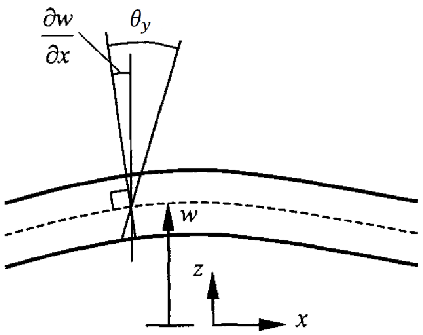

Figure 1 Rotations of the normal in the Mindlin plate [10].

in which z is measured from the neutral surface of whole structure consists of the plate and one or more stiffeners. Based on linear elasticity the strain component are given by

$$\begin{Bmatrix} \varepsilon_x \\ \varepsilon_y \\ \varepsilon_{xy} \\ \varepsilon_{xz} \\ \varepsilon_{yz} \end{Bmatrix} = \begin{Bmatrix} -z\,\frac{\partial \theta_y}{\partial x} \\ -z\,\frac{\partial \theta_x}{\partial y} \\ -z\,\left(\frac{\partial \theta_x}{\partial x} + \frac{\partial \theta_y}{\partial y}\right) \\ \frac{\partial w}{\partial x} - \theta_y \\ \frac{\partial w}{\partial y} - \theta_x \end{Bmatrix}, \tag{7}$$

$$\{\varepsilon_p\} = \begin{Bmatrix} \varepsilon_x & \varepsilon_y & \varepsilon_{xy} & \varepsilon_{xz} & \varepsilon_{yz} \end{Bmatrix}, \tag{8}$$

Where ε_x and ε_y are normal strains, and ε_{xy}, ε_{xz} and ε_{yz} are shear strains. For isotropic, linear elastic, Hookian Materials

$$\{\sigma_p\} = [D_p]\{\varepsilon_p\}, \tag{9}$$

$$D_p = \begin{bmatrix} \frac{E}{1-\nu^2} & \frac{\nu E}{1-\nu^2} & 0 & 0 & 0 \\ \frac{\nu E}{1-\nu^2} & \frac{E}{1-\nu^2} & 0 & 0 & 0 \\ 0 & 0 & G & 0 & 0 \\ 0 & 0 & 0 & \kappa G & 0 \\ 0 & 0 & 0 & 0 & \kappa G \end{bmatrix}, \tag{10}$$

$$\{\sigma_p\} = \begin{Bmatrix} \sigma_x & \sigma_y & \tau_{xy} & \tau_{xz} & \tau_{yz} \end{Bmatrix}, \tag{11}$$

Where σ_x and σ_y are normal strains, τ_{xy}, τ_{xz} and τ_{yz} are shear strains, E is the elasticity modulus, G is the shear modulus, ν is the poison's ratio and κ is the shear correction factor to compensate the error due to the assumption of constant shear strains within the plate thickness. In this stage, strain energy functional of the plate element can be obtained

$$U_p = \frac{1}{2} \int \{\varepsilon_p\}^T \{\sigma_p\}\, dV, \tag{12}$$

In which V is the volume of the plate element. The kinetic energy of vibrating plate element is also given by

$$T_p = \frac{1}{2} \int \rho \left[\left(\frac{\partial U}{\partial t} \right)^2 + \left(\frac{\partial V}{\partial t} \right)^2 + \left(\frac{\partial W}{\partial t} \right)^2 \right] dV, \tag{13}$$

In which t denotes time and ρ is the plate mass density. The integrations are calculated using gauss quadrate scheme. Special considerations are applied so as to avoid shear locking effect [5, 7, 10, 15, 22].

2.2 Stiffener

In this section, the matrices corresponding to the stiffener which can be placed everywhere within the plate element are extracted. The proposed method releases the formulation from the limitation of stiffeners to be lied along nodal lines. Hence, oblique stiffeners can be analysed. For this purpose, by use of same shape function for both the plate and the stiffeners, displacement compatibility is guaranteed and no additional node is introduced for the stiffeners. The stiffener specifications are calculated at the Gauss points along it. Therefore a transformed coordinate system is implemented (Figure 2). Based on Timoshenko beam theory, displacement field of the stiffener is given by

$$\begin{Bmatrix} U' \\ \mathrm{V}' \\ \mathrm{W}' \end{Bmatrix} = \begin{Bmatrix} -\mathrm{z}\theta_{y'} \\ -\mathrm{z}\theta_{x'} \\ w \end{Bmatrix}, \tag{14}$$

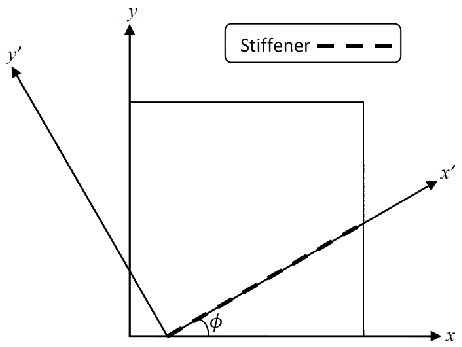

Figure 2 Transformed coordinate system for the stiffener.

where $\theta_{x'}$ and $\theta_{y'}$ are rotations about x' and y', respectively. As mentioned before, z is measured from the reference surface of whole structure. Displacement functions can be expressed in terms of nodal values of plate element using a transformation matrix (Eq. 15) and aforementioned shape functions.

$$\begin{Bmatrix} \theta_{x'} \\ \theta_{y'} \end{Bmatrix} = \begin{bmatrix} \cos\phi & \sin\phi \\ -\sin\phi & \cos\phi \end{bmatrix} \begin{Bmatrix} \theta_x \\ \theta_y \end{Bmatrix}, \tag{15}$$

Again, by applying linear elasticity

$$\left\{ \begin{array}{c} \varepsilon_{x'} \\ \varepsilon_{x'z'} \\ \varepsilon_{x'y'} \end{array} \right\} = \left\{ \begin{array}{c} -z \ \frac{\partial \theta_{y'}}{\partial x'} \\ \frac{\partial w}{\partial x'} - \theta_{y'} \\ -z \ \frac{\partial \theta_{x'}}{\partial x'} \end{array} \right\}, \tag{16}$$

$$\{\varepsilon_s\} = \left\{ \begin{array}{ccc} \varepsilon_{x'} & \varepsilon_{x'z'} & \varepsilon_{x'y'} \end{array} \right\}, \tag{17}$$

Similar to the plate element, for an isotropic material

$$\{\sigma_s\} = [D_s] \ \{\varepsilon_s\}, \tag{18}$$

$$D_s = \left[\begin{array}{ccc} \frac{E}{1-\nu^2} & 0 & 0 \\ 0 & \kappa G & 0 \\ 0 & 0 & G \end{array} \right], \tag{19}$$

$$\{\sigma_s\} = \left\{ \begin{array}{ccc} \sigma_{x'} & \tau_{x'z'} & \tau_{x'y'} \end{array} \right\}, \tag{20}$$

In which $\sigma_{x'}$ is the normal stress along the longitudinal axis of the stiffener, $\tau_{x'z'}$ is shear strain and $\tau_{x'y'}$ is torsional strain. So energy functional of the stiffener are obtained as follow

$$U_s = \frac{1}{2} \int \{\varepsilon_s\}^T \{\sigma_s\} \ dV, \tag{21}$$

$$T_s = \frac{1}{2} \int \rho \left[\left(\frac{\partial U'}{\partial t} \right)^2 + \left(\frac{\partial V'}{\partial t} \right)^2 + \left(\frac{\partial W'}{\partial t} \right)^2 \right] dV', \tag{22}$$

in which V' is the volume of the part stiffener, confined within the plate element. The governing equation of vibration of stiffened plates is derived by use of Hamilton's principle which requires

$$d \int_{t_f}^{t_i} \left[(T_p + T_s) - (U_p + U_s) \right] dt = 0, \tag{23}$$

where d is the variational operator. Now stiffness and mass matrices of the stiffened element can be calculated. By assembling matrices corresponding to each element in a suitable manner, overall stiffness and mass matrices are obtained. Finally, boundary conditions are applied and governing eigenvalue equation for un-damped free vibration of stiffened plates takes the form

$$[K]\{d\} = \omega^2 [M]\{d\}, \tag{24}$$

where ω is the natural frequency in radian per second, and $\{d\}$ represents eigenvector [5, 7, 10, 15, 22].

2.3 Super element

The super element is a compound one, which is composed of a number of conventional finite elements. In this regard, each super element is divided into a number of conventional elements and corresponding matrices to each subdivided element are constructed (Figure 3).

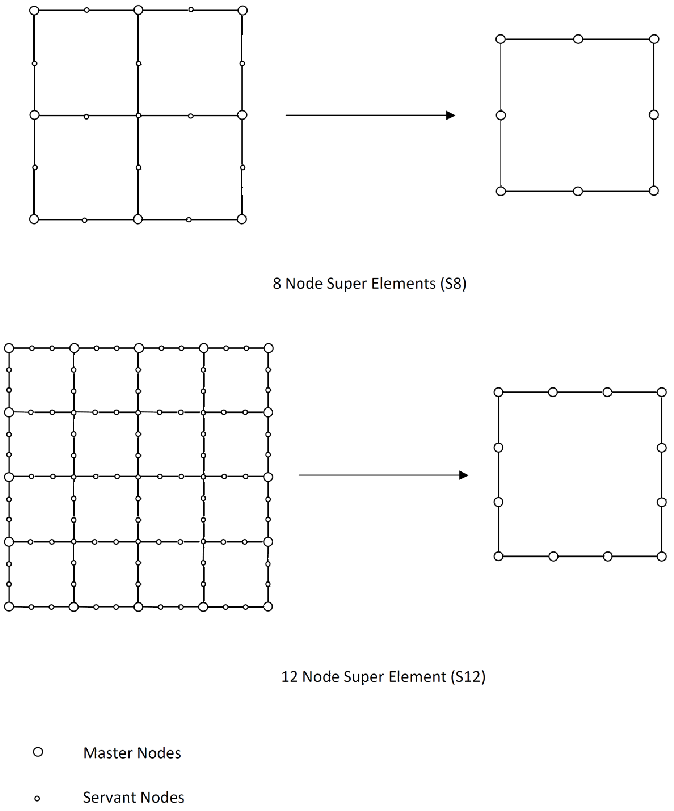

Figure 3 Super elements.

Subdivided elements' matrices are assembled, as in general finite element procedure. Degrees of freedom related to servant nodes, defined later, are then condensed out while the effect of them on super element matrices is taken into account. This procedure is named as dynamic condensation, which is described in the following. The dynamic equilibrium equation neglecting damping effect is given by,

$$\begin{bmatrix} M_{ss} & M_{sc} \\ M_{cs} & M_{cc} \end{bmatrix} \begin{Bmatrix} \ddot{d}_s \\ \ddot{d}_c \end{Bmatrix} + \begin{bmatrix} K_{ss} & K_{sc} \\ K_{cs} & K_{cc} \end{bmatrix} \begin{Bmatrix} d_s \\ d_c \end{Bmatrix} = \begin{Bmatrix} F_s \\ F_c \end{Bmatrix}, \tag{25}$$

Where index s denotes the terms related to the DOFs of super nodes that will remain after condensation, and c represents the terms related to other DOFs which will condensed out through the this procedure. They are sometimes called as master and servant nodes, respectively. Using appropriate transformation matrix the following equation is obtained,

$$T_s^T \begin{bmatrix} M_{ss} & M_{sc} \\ M_{cs} & M_{cc} \end{bmatrix} T_s \ddot{d}_s + T_s^T \begin{bmatrix} K_{ss} & K_{sc} \\ K_{cs} & K_{cc} \end{bmatrix} T_s d_s = T_s \begin{Bmatrix} F_s \\ F_c \end{Bmatrix}, \tag{26}$$

$$\overline{M}\ddot{d}_s + \overline{K} d_s = \overline{F}. \tag{27}$$

In this way, the effect of servant node is also embedded in the condensed super element. Aforementioned element has remarkable ability to reduce the size of problem.

3 NUMERICAL EXAMPLES

3.1 Vibration of a Mindlin plate with different boundary conditions

In order to assess the vibration behaviour of the super plate elements, free vibration of a square Mindlin plate with different boundary conditions is first investigated. This problem has been studied by several investigators using exact or other approximate methods. The natural frequencies are presented in terms of the non-dimensional eigenvalue λ, given by

$$\lambda = \rho h \omega^2 a^4 / D\pi^4, \tag{28}$$

where D is the plate flexural rigidity, h is the plate thickness, and a the side length of the plate. The eigenvalues for the various combinations of edge conditions are shown in Table 1.

The comparison between present and other numerical results shows a good agreement in all ten cases considered. It should be noted that, unlike super element developed by Koko and Olson [9] the present super elements result in accurate values for second and higher modes. It is also indicated that, implementing super elements leads to reduction in computational time with no significant change in results accuracy, which is expected because of the significantly fewer number of global DOFs, used in the super elements.

3.2 Clamped square plate with a central stiffener

To validate the present formulations and study the characteristics of super elements, a stiffened clamped square plate with central stiffener (Figure 4) is analyzed. ($E = 6.87 \times 10^{10}\ \frac{N}{m^2}$, $\nu = 0.3$, $\rho = 2823\ \frac{kg}{m^3}$)

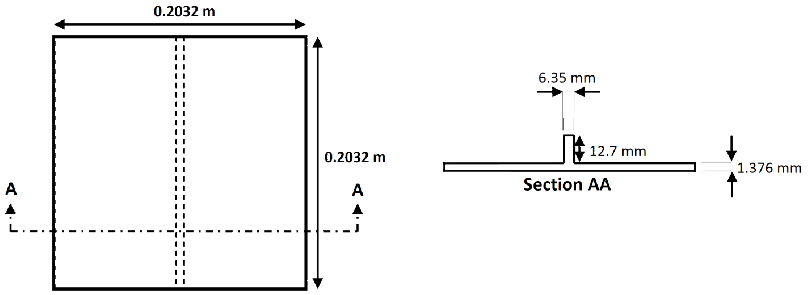

Figure 4 Clamped square stiffened plate with one central stiffener.

Table 1 Eigenvalues of a square plate with different edge conditions.

Boundary condition	Mode Shape	Natural Frequency [Hz]					
		Durvasla et al. [9]	Koko and Olson [9]	Present Analysis			
				Q8	Q9	S8	S12
SSSS	1	4	4	4.0096	4.0141	3.9283	3.7819
	2	25	35.38	25.3289	25.4865	24.8472	23.7557
CCCC	1	13.4	13.37	13.6588	13.7948	13.3251	11.9945
	2			58.3273	59.4948	57.0573	49.1684
SCSC	1	8.64	8.63	8.7705	8.85	8.5764	7.8526
	2	31.13	41.59	31.4342	31.6446	30.6761	28.9287
CCCF	1			6.0416	6.1131	5.9354	5.3155
	2			16.8429	16.9894	16.4938	15.1469
CCCS	1	10.49	10.45	10.6217	10.7154	10.3739	9.4666
	2	41.62	74.83	42.6466	43.1586	41.6568	37.8995
CCSS	1	7.6	7.55	7.6117	7.6531	7.4406	6.9472
	2	37.13	70.96	38.8016	39.3205	38.015	34.7716
SSSC	1	5.77	5.75	5.7906	5.814	5.6667	5.3504
	2	27.75	38.07	27.8554	28.0273	27.2658	25.9524
CFCF	1	5.14	5.07	5.1918	5.2589	5.1019	4.5284
	2	7.27	7.25	7.3622	7.4432	7.2436	6.5744
SCSF	1	1.65	1.66	1.6698	1.6737	1.6434	1.5689
	2	11.22	11.6	11.3835	11.4457	11.1839	10.5609
FFFF	1	2.04	2.02	1.8883	1.8902	1.8812	1.8488
	2	4.34	4.11	4.0062	4.0163	3.9451	3.7531
Global DOF				1443	1323	288	192
Run Time [S]				59.4288	46.8052	2.434	3.0184

The first ten natural frequencies from the super elements are compared with the finite element and experimental results in Table 2. A fundamental modeling difference between the super element developed by Koko and Olson [9] and present elements, is that they allow for in-plane displacements of the plate, whereas the present theory assumes pure bending deformation of the plate. However, such effects are expected to be small for thin plates.

All frequencies from the present approach are very close to the experimental and conventional finite element results. The agreement between the super elements and the experimental results reported by Olson and Hazell is wonderful. Although deviation of the eigenfrequencies computed employing S12 from mentioned results is negligible, based on authors' point of view results obtained by S8 are more accurate. Because Due to the finite stiffness of any clamped structure, exact edge conditions are not possible in practice. Consequently numerical results must be on the stiff side of experimental ones.

Moreover, it can be seen from the table that there is a significant reduction in the global DOFs and consequently in computational time by utilizing super elements, compared to the conventional finite elements. As another conclusion, effect of neglecting in-plane deflections on natural frequencies isn't considerable in this case.

Table 2 Natural frequencies of Clamped square stiffened plate with one central stiffener.

Mode No.	Natural Frequency [Hz]							
	Olson and Hazell [14]		Nayak [13]	Koko [9]	Present Analysis			
	Experiment	FEM			Q8	Q9	S8	S12
1	689	718.1	725.1	736.8	725.505	724.511	707.236	690.848
2	725	751.4	745.2	769.4	763.367	762.77	748.275	727.726
3	961	997.4	987.1	1020	994.79	987.675	961.085	939.819
4	986	1007.1	993.9	1032	1005.23	998.075	971.994	949.812
5	1376	1419.8	1400.4	1484	1422.5	1402.72	1360.67	1329.34
6	1413	1424.3		1488	1427.02	1407.05	1365.25	1333.47
7	1512	1631.5			1872.59	1876.35	1828.89	1744.42
8	1770	1853.9			1907.33	1916.1	1916.36	1786.69
9	1995	2022.8			2032.46	1995.47	1930.9	1878.21
10	2069	2025			2034.67	1997.53	1933.1	1880.18
Global DOF					1443	1323	1023	651
Run Time [S]					52.6695	41.4733	18.0866	9.7595

3.3 Clamped square plate with two parallel stiffeners

This configuration has first been studied by Olson and Hazell [14] using experimental and conventional finite element method (Figure 5). Boundary conditions and material properties are same as the previous example.

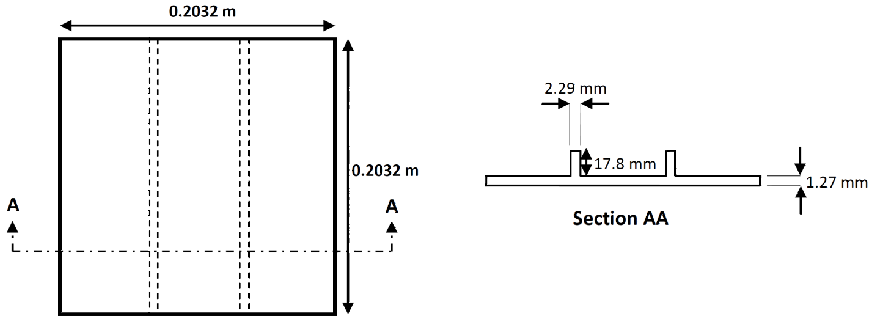

Figure 5 Clamped square plate with two parallel stiffeners.

Eigenfrequencies obtained from the present analysis are presented in Table 3 along with the previous numerical and experimental results.

Again, there are significantly fewer global DOFs used in the super element models than the conventional finite element models, which leads to considerable reduction in computational time. Present super elements predictions are almost in agreement with the results obtained from previous super element results [14]. But there is relatively remarkable difference with the experimental results. The reason may be

1. Perfectly clamped edges are impossible in practice, so experimental results are lower than the numerical ones, as said.

Table 3 Natural frequencies of Clamped square stiffened plate with two parallel stiffeners.

Mode No.	Natural Frequency [Hz]						
	Olson and Hazel [14]		Koko [9]	Present Analysis			
	Experiment	FEM		Q8	Q9	S8	S12
1	909	965.3	1072.8	1122.01	1121.63	1072.65	1088.59
2	1204	1272.3	1334.2	1325.21	1326.76	1251.1	1220.83
3	1319	1364.3	1410.3	1391.3	1389.81	1342.93	1226.66
4	1506	1418.1	1483.2	1534.31	1533.32	1459.65	1481.41
5	1560	1602.9	1649.2	1626.98	1626.29	1525.29	1527.97
6	1693	1757.1	1730.5	1662.27	1661.15	1572.39	1548.08
7	1807	1854.1		1937.8	1933.64	1828.38	1851.58
8	1962	2015.4		1983.61	1979.09	1851.79	1863.59
9	2052	2109.4		2000.67	1996.04	1881.87	1882.47
10	2097	2253.1		2457.91	2447.69	2297.87	2105.15
Global DOF				3135	2883	3135	1380
Run Time [S]				758.278	608.478	733.581	56.4338

2. In-plane deflections are neglected in this investigation. With increase in number of stiffeners these displacements play more important role. Although this simplification leads to less computational time, can affect results when number of stiffeners increases. Because in this case deviation of reference surface of whole structure from plate midplane and consequently first moment of inertia gets more considerable.

Eigenfrequencies from present conventional elements are always on the stiff side of experimental values except for two modes, contrary to what is expected of a displacement based theory. It is possible that the experimental procedure have not measured the frequencies of those modes accurately. In the case of super elements, again S8 leads to more acceptable results, especially for the first three modes. Therefore, the viability of the super element formulation is clearly exhibited in that most of the super element solutions are close to the experimental and conventional finite element results, even though this method uses significantly fewer DOFS.

3.4 Convergence study

The accuracy of numerical calculations depends on the number of the divisions. Convergence characteristics of the elements used with respect to number of divisions is studied in this section. The Analysis is performed on a clamped square plate with central stiffener (Figure 4). Results are shown in Figure 6.

It can be seen obviously from the Figure 6 that the conventional elements have faster rate of convergence compared to super elements. In fact, super elements do not converge necessarily. Although these elements lead to acceptable results with low number of elements, recedes from the exact eigenfrequencies with an increase in number of divisions. The reason may be eliminating internal nodes and making the super element softer. As another conclusion, 2 and 3 elements per bay is needed for analyzing a stiffened plate using the S12 and S8 elements,

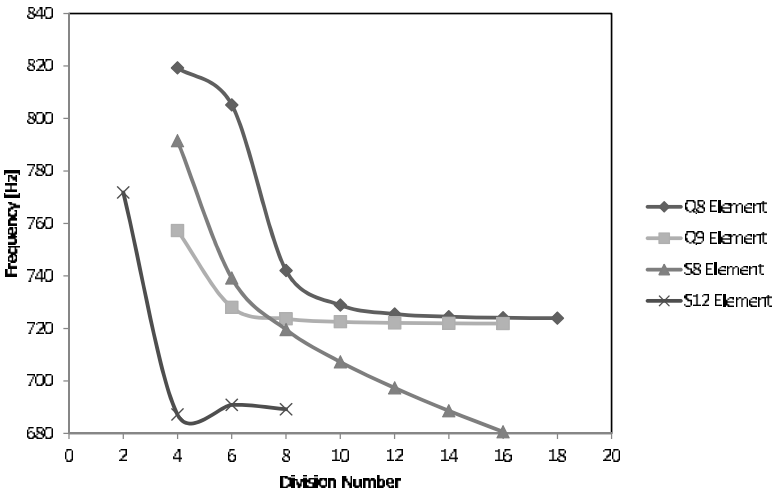

Figure 6 Convergence study of the elements used.

respectively, but in other cases 5 elements should be employed in each bay. The rest of present calculations are based on mentioned division numbers.

3.5 Effect of eccentricity

To investigate the effect of eccentricity on the free vibration of stiffened plates, a clamped square plate with one, two and three stiffeners has been analysed for both concentric and eccentric types (Figure 7). ($E = 2.06 \times 10^{11}\ \frac{N}{m^2}$, $\nu = 0.3$, $\rho = 7650\ \frac{kg}{m^3}$)

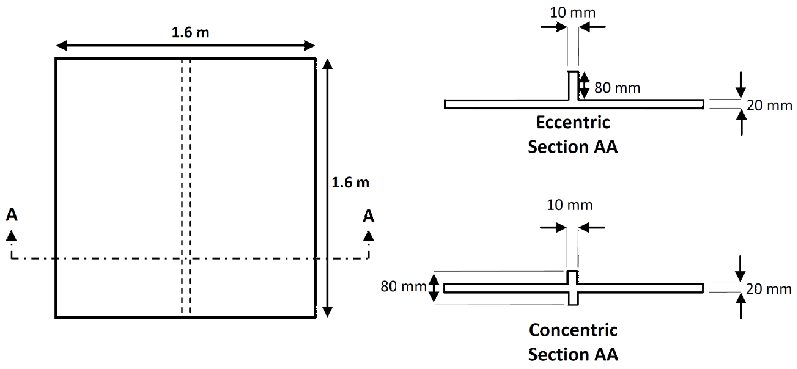

Figure 7 Clamped square plate with concentric and eccentric stiffeners.

The results obtained from such case are presented in Table 4. The effect of eccentricity on eigenfrequencies has been observed.

It is interesting to note that the inclusion of eccentricity does not affect the values of natural frequencies of the clamped plate with merely one stiffener. As the number of stiffeners increases, effect of eccentricity is more insignificant. Deviation of neutral surface of whole structure, with respect to which second moments of inertia, should be calculated from mid

Table 4 Natural frequencies of a clamped square plate with concentric and eccentric stiffeners.

Stiffener No.	Natural Frequency [Hz]					
	1		2		3	
Mode No.	Eccentric	Concentric	Eccentric	Concentric	Eccentric	Concentric
1	131.8507	132.2772	203.8146	202.7164	270.4664	263.0167
2	155.8791	154.4151	254.2835	251.3998	279.7375	277.2788
3	196.5682	197.046	255.8007	253.8769	362.572	358.7522
4	219.5702	218.9409	288.6985	291.2963	380.6867	386.0687
5	296.9567	297.4925	342.6987	342.8742	406.3232	414.3255
6	312.0192	310.6612	362.2659	358.1533	449.9921	447.2937
7	320.108	315.2892	394.7799	398.0341	511.1413	507.8233
8	364.9126	368.3815	430.851	427.1797	512.9898	508.1754
9	428.1735	430.8037	437.438	438.3834	526.6003	537.712
10	431.9031	433.4756	458.5447	455.2726	575.1297	578.5875

plane of the plate may be the reason. It is worth to mention that in the case of concentric stiffeners the neutral surface is same as the mid plane of the plate.

From the preceding discussion it can be concluded that the consideration of eccentricity affects the natural frequencies of stiffened clamped plates. But when there is just one stiffener, the effect of eccentricity can be neglected without any significant loss of accuracy. Whether this conclusion is true for other boundary conditions or not, needs more investigations.

3.6 Number of stiffeners

The objective of the present example is to study the influence of the number of stiffeners on natural frequencies of square clamped plates. Dimensions and material properties are the same as previous section. Number of stiffeners is changed from 0 to 11 and results are summarized in Figure 8 for the first five modes.

Figure 8 clearly shows that the fundamental frequency is increasing with the increase in the number of stiffeners, which was expected before. However this increase gradually becomes insignificant after a critical value of the number of stiffeners, as generally observed for all 5 modes. This critical value is 4 or 5 stiffeners. Based on authors' point of view the reason is that, utilizing stiffeners leads to eliminating some mode shapes, so the fundamental frequency increases. But after this critical value, no mode shape elimination occurs and stiffened plate acts as a plate with larger thickness. Therefore providing more than four stiffeners is not recommended based on economical point of view.

3.7 Inclination angle

Improving the vibration or noise characteristics of structures by changing its configuration has been a subject that has fascinated the minds of engineers and scientists during last decades [1]. In this section, the orientation angle of the stiffener arranged over a clamped square plate is selected to optimize the dynamic characteristics of these plates/stiffener assemblies (Figure 9).

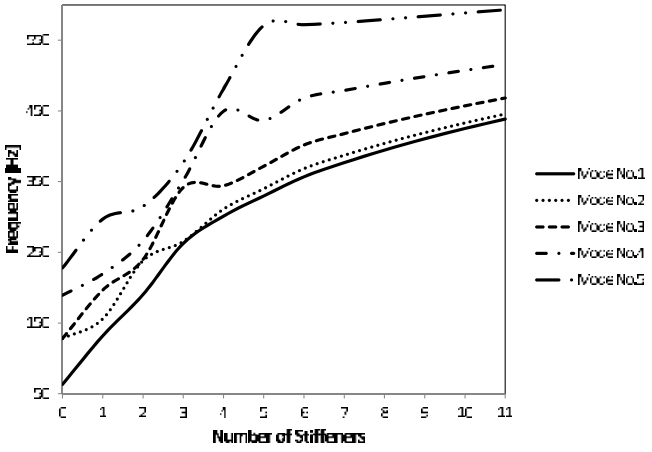

Figure 8 Fundamental frequency with respect to number of stiffeners

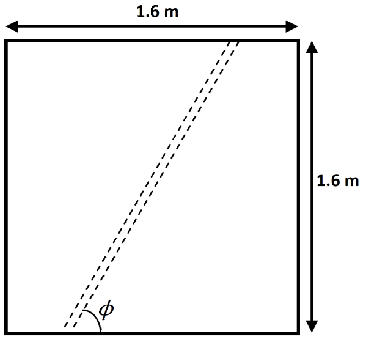

Figure 9 Schematic figure of a plate with oblique stiffener

The objective is to find the inclination angle (ϕ) for the stiffener arrangement that maximizes the fundamental frequency of the stiffened plate structure. The first natural frequency as a function of the stiffener inclination angle is calculated and plotted in Figure 10.

With due attention to Figure 10 an optimum value for inclination angle of 80° was found to maximize the fundamental frequency. The presented approach can be invaluable in the design of stiffened plates for various vibration and noise control applications.

3.8 Practical configurations in ship

Two practical configurations which are used practically in the body of ships are analysed. These two cases are square clamped plates with one stiffener (Case 1) and with two orthogonal stiffeners (Case 2) shown in figure 11. The dimensions of the plate and the stiffeners are the same in both cases. The material properties are similar to the previous example.

Calculations have been performed for different thicknesses. Results are presented in Tables 5 and 6.

Table 5 Natural frequencies of a clamped square plate with one stiffener.

	Natural Frequency [Hz]													
	Stiffened												Un Stiffened	
Thickness	12 mm		14 mm		16 mm		18 mm		20 mm				20 mm	
Mode No.	S8	S12	S8	S12	S8	S12	S8	S12	S8	S12			S8	S12
1	86.4467	84.9931	97.4543	96.5923	108.403	108.305	119.275	120.07	130.063	131.851			62.9993	63.1424
2	107.066	103.144	121.843	117.709	135.566	131.352	148.248	144.07	159.915	155.879			127.921	128.1
3	129.431	127.264	146.207	144.824	162.516	162.151	178.555	179.38	194.422	196.568			127.921	128.1
4	140.835	137.783	161.622	159.078	181.613	179.812	200.857	199.98	219.406	219.57			189.19	189.242
5	192.135	188.67	218.779	216.512	244.402	243.719	269.304	270.49	293.698	296.957			227.883	227.937
6	198.241	194.297	227.643	224.717	256.04	254.512	283.522	283.66	310.166	312.019			229.089	229.164
7	235.767	229.005	268.148	260.942	299.898	282.119	327.159	301.56	342.069	320.108			287.433	287.241
8	262.72	236.939	288.852	263.251	309.871	297.411	330.987	331.33	361.462	364.913			287.433	287.241
9	277.01	270.883	316.141	311.785	353.322	351.282	389.067	389.91	424.044	428.174			362.964	362.435
10	280.729	274.283	320.07	314.748	356.307	353.896	392.332	393.08	427.82	431.903			362.964	362.435

Table 6 Natural frequencies of a clamped square plate with two orthogonal stiffeners.

	Natural Frequency [Hz]													
	Stiffened												**Un Stiffened**	
Thickness	**12 mm**		**14 mm**		**16 mm**		**18 mm**		**20 mm**		**20 mm**	
Mode No.	**S8**	**S12**	**S8**	**S12**	**S8**	**S12**	**S8**	**S12**	**S8**	**S12**	**S8**	**S12**
1	136.508	135.436	151.87	151.789	166.767	167.858	181.527	183.921	196.3	200.081	62.9993	63.1424
2	145.206	143.964	163.12	162.829	179.772	180.543	195.239	195.538	209.534	206.038	127.921	128.1
3	147.093	145.637	166.304	165.753	184.786	182.654	201.193	197.089	212.277	212.413	127.921	128.1
4	152.084	148.545	171.095	167.015	187.503	185.318	202.719	204.454	220.195	223.203	189.19	189.242
5	277.964	257.374	297.104	276.159	312.346	294.133	326.711	312.899	341.702	332.823	227.883	227.937
6	285.937	282.277	320.655	319.586	354.554	356.489	381.908	381.751	399.193	400.699	229.089	229.164
7	287.006	283.365	322.463	321.417	357.026	358.029	388.049	393.265	421.337	430.001	287.433	287.241
8	288.807	285.011	325.033	323.645	358.508	358.992	391.046	396.301	424.723	433.435	287.433	287.241
9	289.807	285.956	326.703	325.376	362.877	364.488	397.735	402.381	431.885	440.056	362.964	362.435
10	303.701	298.121	336.821	333.087	365.317	365.354	398.551	403.372	433.803	441.99	362.964	362.435

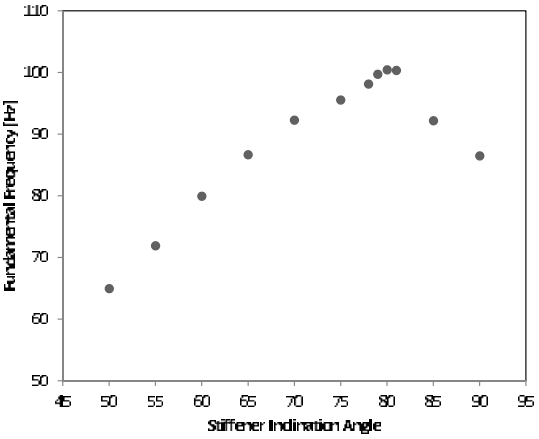

Figure 10 Optimum inclination angle of the stiffener.

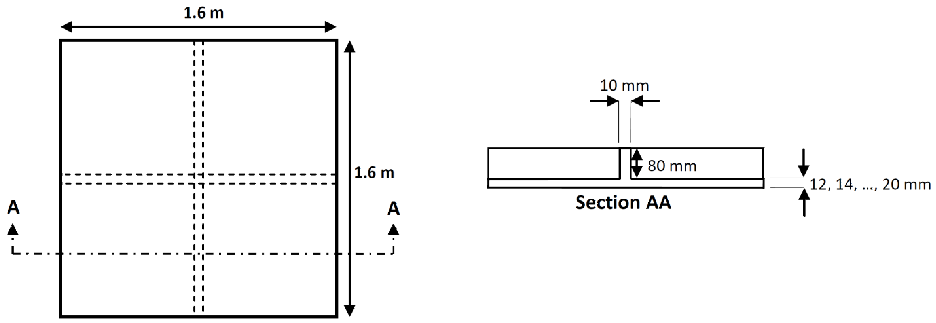

Figure 11 Square clamped plate with two orthogonal stiffeners.

Figure 6 and 7 show that adding stiffener to the plate can increase its natural frequency significantly, which was predictable. Moreover, form obtained results it seems that natural frequencies vary linearly with the thickness of the plate.

4 CONCLUSION

The vibration analysis of stiffened plates using both conventional and super elements has been presented. The capability of placing stiffeners anywhere within the plate element has enabled the proposed formulation to encounter any configuration of stiffened plates. The efficiency of the super elements has been examined with different types of problems. The comparison of the present approach with the existing numerical and experimental results shows remarkable agreement. Although super elements yield acceptable results in significantly short time, conventional elements are superior to them according to their convergence characteristics. As a result, these elements are attractive for preliminary designs and parametric studies, where repeated calculations are often needed. It is also observed that the fundamental frequency of

stiffened plates is increasing with the increase in the number of stiffeners up to a specific number after which there is no appreciable increase in frequency. Moreover, the effect of neglecting the eccentricity of the stiffeners has been studied in details. It is understood that for a clamped plate with only one stiffener eccentricity can be neglected with no considerable change in results. However, effect of eccentricity for more stiffeners should be included. This paper has also presented a rational design approach to optimize the dynamic characteristics of stiffened plates. In order to maximize the fundamental frequency, the optimal orientation angle is found to be equal to 80°. Further works can be undertaken to study hydroelastic analysis of stiffened panels, which may be important in practical point of view for marine structures.

Acknowledgement The authors would like to acknowledge the financial support received from Iranian Offshore Oil Company.

References

[1] W. Akl, A. El-Sabbagh, and A. Baz. Optimization of the static and dynamic characteristic of plates with isogrid stiffeners. *Finite Elements in Analysis and Design*, 44:513–523, 2008.

[2] M. Barik and M. Mukhopadhyay. A new stiffened plate element for the analysis of arbitrary plates. *Thin-Walled Structures*, 40:625–639, 2002.

[3] M. Barrette, A. Berry, and O. Beslin. Vibration of stiffened plates using hierarchal trigonometric functions. *Journal of Sound and Vibration*, 235(5):727–774, 2000.

[4] M.V. Dharaneepathy and L.J. Sudhesh. Optimal stiffening of square plates subjected to air blast loading. *Computers & Structures*, 36:891–899, 1990.

[5] Sh. Jafarpour Hamedani. Vibrations of stiffened plates with initial geometric imperfections. Master's thesis, Faculty of Marine Technology, Amirkabir University of Technology, Tehran, Iran, 2011.

[6] Sh. Jafarpour Hamedani and M.R. Khedmati. Vibration of stiffened plates: Literature review. In *12th Conference of Marine Industries*, Zibakenar, Iran, 2010. In Persian.

[7] Sh. Jafarpour Hamedani and M.R. Khedmati. Linear vibration analysis of stiffened plates. *Iranian Journal of Marine Science*, 2011. In Persian.

[8] A.A. Jafari and M. Bagheri. Free vibration of non-uniformly ring stiffened cylindrical shells using analytical, experimental and numerical methods. *Thin Walled Structures*, 44:82–90, 2006.

[9] T.S. Koko and M.D. Olson. Vibration analysis of stiffened plates by super elements. *Journal of Sound and Vibration*, 158(1):149–167, 1992.

[10] K.M. Liew, C.M. Wang, Y. Xiang, and S. Kitipornchai. *Vibration of Mindlin plates*. Elsevier Science Ltd., United Kingdom, 1st edition, 1998.

[11] A. Mukherjee and M. Mukhodpadhyay. Finite element free vibration of eccentrically stiffened plates. *Computers & Structures*, 30:1303–1317, 1987.

[12] B.A. Mustafa and R. Ali. Prediction of natural frequency of vibration of stiffened cylindrical shells and orthogonally stiffened curved panels. *Journal of Sound and Vibration*, 113(2):317–327, 1987.

[13] A.N. Nayak and J.N. Bandyopadhyay. On the free vibration of stiffened shallow shells. *Journal of Sound and Vibration*, 255(2):357–382, 2002.

[14] M.D. Olson and C.R. Hazell. Vibration studies on some integral rib-stiffened plates. *Journal of Sound and Vibration*, 50(1):43–61, 1977.

[15] M. Petyt. *Introduction to finite element vibration analysis*. Cambridge University Press, United Kingdom, 1st edition, 1990.

[16] B.G. Pustry. Free vibration and buckling response of hat-stiffened composite panels under general loading. *International Journal of Mechanical Sciences*, 50:1326–1333, 2008.

[17] A. Samanta and M. Mukhopadhyay. Free vibration analysis of stiffened shells by the finite element technique. *European Journal of Mechanics A/Solids*, 23:159–179, 2004.

[18] G. Sinha and M. Mukhopadhyay. Finite element free vibration analysis of stiffened shells. *Journal of Sound and Vibration*, 171(4):529–548, 1994.

[19] B. Sivasubramonian, G.V. Rao, and A. Krishnan. Free vibration of longitudinally stiffened curved panel with cutout. *Journal of Sound and Vibration*, 226(1):41–56, 1999.

[20] M. Moshrefi Torbati, C. Simonis de Cloke, and A.J. Keane. Vibration optimization of a mass loaded stepped plate. *Journal of Sound and Vibration*, 213(5):865–887, 1998.

[21] G.M. Voros. Buckling and free vibration analysis of stiffened panels. *Thin Walled Structures*, 47:382–390, 2009.

[22] O.C. Zienkiewicz and R.L. Taylor. *The finite element method for solid and structural mechanics*. Elsevier Ltd., USA, 6th edition, 2005.