Latin American Journal of Solids and Structures
www.lajss.org

Characterization of Fiber Reinforced Self-Consolidating Mortars for Use in Patching Damaged Concrete

Abstract

This research aims to study the effect of supplementary cementitious materials (SCM_s) such as quarry dust limestone (QDL) and natural pozzolana (NP) on the performance of fiber reinforced self-consolidating repair mortars ($FR\text{-}SCRM_s$). Based on previous optimization of QDL and NP replacement ratios, two mortar mixtures incorporating 10% QDL and 20% NP as cement replacements were prepared. The evaluation was based on both fresh (slump flow, flow time) and hardened (compressive and flexural strengths and adherence to old concrete) tests. In addition, the influence of three curing conditions, similar from those normally encountered in the field was evaluated on the compatibility between repair materials and substrate, under flexural strength test by using third-point's loading beam test method. It is demonstrated that the FR-SCRMs is promising to be used in repair concrete structures class R4 (EN 1504-3) without reducing the adhesive strength.

Keywords

QDL; NP; Fiber-reinforced self-consolidating mortar, Adherence; Old concrete; Compatibility; Third-point bending.

Amar Benyahia [a]
Mohammed Ghrici [a]
Said Choucha [a]
Ahmed Omran [b]

[a] Geomaterials Laboratory, Hassiba Benbouali University of Chlef, P.O. Box 151, Chlef 02000, Algeria.
Benyahia_genie@yahoo.fr
[b] Dept. of Civil Eng., University of Sherbrooke, 2500 Blvd. de l'Université, Sherbrooke (QC) J1K2R1, Canada

http://dx.doi.org/10.1590/1679-78253718

Received 24.01.2017
In revised form 22.04.2017
Accepted 23.04.2017
Available online 25.04.2017

1 INTRODUCTION

Cracks in concrete structures are inevitable. These cracks result usually from poorly concrete mix design, overloading, corrosion, exposure to high temperatures, shrinkage, etc. (Benjeddou et al. 2007, Jummat et al. 2006). The use of patch repair method on cracked concrete structures is widely used to bring the structure to its original capacity (Emmons and Vaysburd 1996). Indeed, this method consists in removing the crumbly parts of concrete and reinstatement with a fresh repair mortar. The success of repairing and strengthening process of reinforced structure depends on the proper bonding between the repair mortars and old concrete. Which in turn results in a monolithic behavior of the repaired composite and therefore no separation at the interface is observed (ACI

1975). To achieve such behavior, selecting suitable repair materials for concrete requires an understanding of compatibility between the repair materials and old concrete and behavior of concrete materials in the exposure conditions (Lee et al. 2007). The repair layer compactness is one of the main parameters that will govern the quality of the bond since the more the repair layer fill the cracks and pores the more mechanical interlock between two layers is obtained. This can be achieved either by using sufficient vibration or highly flowable repair mortar (Liu and Huang 2008, Dawood and Ramli 2014). Selecting self-compacting repair mortars (SCRM) could be a suitable alternative.

Nowadays, self-consolidating repair mortars (SCRMs), as new technology products are especially preferred for the rehabilitation and repair of reinforced concrete structures (Courard et al. 2002). In addition to reducing labor time and noise, the SCRM technology can be also involved in filling narrow gaps between congested steel bars and coatings (Khayat and Morin 2002). The main difference between SCRMs and ordinary mortar is the presence of a large amount of mineral admixtures (pozzolanic or inert fillers) in the former (Cyr et al. 2000). The common mineral admixtures that are likely used in SCRMs are fly ash, quarry dust powder, blast furnace slag, silica fume, and/or quartzite powder (Okamura and Ouchi 2003, Ferraris et al. 2000). Indeed, the mineral admixtures can be blended with cement or added separately during the mortar mixing (Erdoğan 1997). The use the mineral admixtures in SCRMs is not only to enhance flowability properties but also to improve strength and durability characteristics. The cement-based mixtures made with mineral admixtures as partial cement replacement are usually less expensive and eco-friendly. Unfortunately, the traditional mineral admixtures are not available in all areas and would be costly if transported. This gives the motivation to search for alternative local available materials that can be used as mineral admixtures for the production of SCRM. Quarry-dust limestone (QDL) and natural pozzolana (NP) are two possible materials to be used as mineral admixtures in the SCRM production.

The QDL is an industrial by-product obtained during the crushing process of calcareous rocks. The large storage quantities of the QDL waste is considered as one of problems facing the quarry industry. The QDL has very high fine particles that can cause air pollution and therefore, chronic respiratory diseases such as asthma. Past researches (Cochet and Sorrentino 1993, Sahmaran et al. 2006) were performed to study the effects of QDL on the properties of mortar and concrete. These studies showed that the use of QDL improves workability with reduced cement content, mechanicals strength, and durability characteristics. The use QDL in self-consolidating concrete (SCC) is expected to bring significant economical benefits to quarries (Ho et al. 2002) and concrete industry. This could also provide an economical solution for the disposal of the QDL and the environmental problems associated with this material (Torkaman et al. 2014). However, limited researches have been published about the performance of self-consolidating mortar or concrete that contains QDL. The NP is obtained by grinding natural rocks or volcanic sediments that have pozzolanic properties (Shannag and Yeginonobali 1995). The NP is widely existed in large amounts in many regions all over the world where volcanic activities take place.

The NP has been used since long time as a supplementary cementitious material (SCM) to partially replace cement in mortar and concrete. The use of NP as SCM offers cost reduction and many technical advantages, such as reducing the evolution of hydration heat flow, increasing concrete penetrability and mechanical resistance (Mehta 1981, Ramezanianpour et al. 1987). Ghrici et al.

(2006), Ezziane et al. (2007) and Kaid et al. (2009) investigated the effect of NP on fresh and hardened properties of mortars. They found that the use of NP as partial replacement of cement can improve strength and durability characteristics. Shannag and Yeginonobali (1995) reported also that incorporation of NP in SCC provides technical benefits as far as environmental problems be of concern. However, until now, there are few published studies (Behfarnia and Farshadfar 2013, Shaeed et al. 2015, Shamsad et al. 2014) reporting on the use of NP in SCC. In recent years, there was more research attention towards the valorization of natural pozzolanic, industrial by-products, and waste materials in various industrial applications, including concrete and mortar.

The main objective of the current study is to evaluate the feasibility of producing self-consolidating repair mortars using a local quarry dust limestone and natural pozzolana and to evaluate the overall performance of these patch repair materials. Based on an optimization of QDL and NP in previous study (Ghrici et al. 2007) two repair mortars incorporating 10% QDL (FR-SCRM1) and 20% NP(FR-SCRM2) as a cement replacement were evaluated in the fresh and hardened states in comparison to a control mortar with 100% cement (FR-SCRM0). Compatibility between the manufactured patch repair materials and old concrete and behavior of concrete materials in the exposure conditions was also investigated by four-point loading flexural strength test to validate their utility in field.

2 EXPERIMENTAL PROGRAM

2.1 Material Properties

Ordinary Portland cement used in this study was produced according to EN197-1(2000) European Standards and referred as CEM I 42.5. The physical and chemical properties of cement were obtained in laboratory and summarized in Table 1.

Physical properties			
Powder	(OPC)	(QDL)	(NP)
Specific gravity	3.15	2.73	2.62
Specific surface area (m^2/kg)	340	450	600
28-Days compressive strength (MPa)	42.5	--	--
Chemical properties (%)			
Basic oxide	(OPC)	(QDL)	(NP)
Calcium Oxide (CaO)	63.90	52.58	10.91
Silicon Dioxide (S_iO_2)	21.60	4.57	48.00
Aluminum Oxide (Al_2O_3)	4.45	0.43	18.85
Sulphur Trioxide (SO_3)	1.92	0.01	0.50
Ferric Oxide (Fe_2O_3)	5.35	0.43	10.5
Magnesium Oxide (MgO)	1.65	0.22	4.39
Sodium Oxide (Na_2O)	0.11	0.01	0.80
Potassium Oxide (K_2O)	0.22	0.13	0.20
Loss on ignition	0.78	41.58	5.70

Table 1: Physical and chemical properties of Portland cement and powder.

The quarry-dust limestone (QDL) and natural pozzolana (NP) according to ASTM C 618-12, were from obtained from Algerian companies; Oued Fodda and Ferfos (Beni-Saf-West Algerian), respectively. These materials were grinded with a laboratory pulverizer to a particle-size distribution (PSD) with a mean-particle diameter (*d50*) of 125µm. Their physical and chemical properties are also listed in Table 1. The Blaine fineness of the QDL and NP were higher than that of the cement (340 m^2/kg) with respective values of 450 and 600 m^2/kg. Polycarboxylate-based (PCE) superplasticizer conforming EN 934-2 (2009) specifications, with a density of 1.065 g/cm^3 and a solid content of 30% was used in the mortar mixes. PPF fiber of 12 mm in length was used in this investigation. The general characteristics of this fiber are shown in Table 2.

Photo	Length	Specific gravity	Melting point	Young's Modulus	Maximum elongation at failure	Section of fiber
	12 mm	0.9	150°C	3kN/mm^2	50%	30 µm

Table 2: General characteristics of polypropylene fibers.

The coarse aggregate (G) used in this study was crushed limestone sourced from a local quarry. It had a maximum size of aggregate (MSA) of 15 mm and specific gravity of 2.56. Natural land sand (LS) and natural river sand (RS) were used as fine aggregate. Their specific gravities were 2.36 and 2.42 respectively. Properties of these aggregates are given in Table 3. The PSD of the fine and coarse aggregates were determined by sieve analysis and the results are presented in Figure 1.

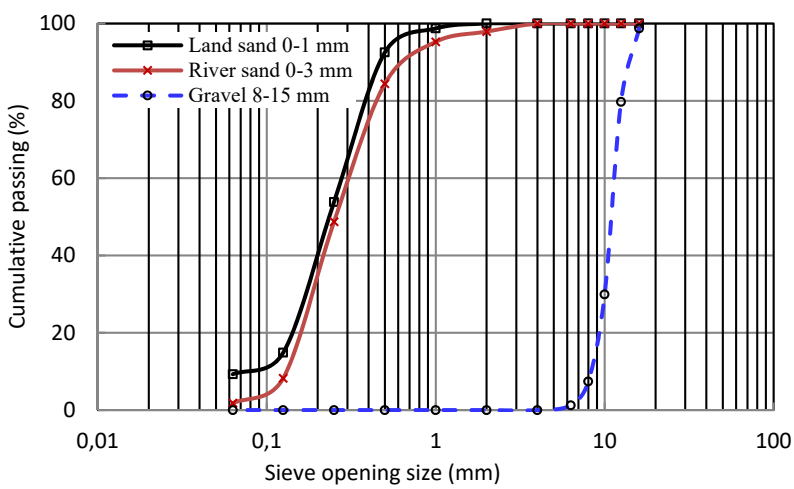

Figure 1: Particle-size distribution of fine and coarse aggregates.

Properties	(LS)	(RS)	(G)
Specific gravity	2.36	2.42	2.56
Fineness modulus	1.50	1.65	--
Absorption	0.73	0.78	--

Table 3: Physical properties of sand and coarse aggregates.

2.2 Mixing Proportions

One control (FR-SCRM0) and two mixtures incorporating quarry dust limestone (FR-SCRM1) and natural pozzolana (FR-SCRM2) were prepared according to the requirements of the European Federation for Specialist Construction Chemicals and Concrete Systems (EFNARC 2005).

Name of the repair mortars	Cement (OPC) [kg]	quarry-dust limestone (QDL) [kg]	natural pozzolana (NP) [kg]	Total powder (P) [kg]	Water [kg]	coarse aggregate (G) [kg]	natural river sand (RS)] [kg]	Natural land sand (LS) [kg]	Water-to-powder ratio (W/P)	Superplasticizer SP [kg]	PPF fiber [%]
FR-SCRM0	685	--	--	685	275	--	955	319		7.4	
FR-SCRM1	616	69	--	685	275	--	955	319	0.4	6.5	0.03
FR-SCRM2	548	--	137	685	275	--	955	319		8.2	
Substrate concrete	340	--	--	340	170	1130	720	--	0.5	--	--

Table 4: Mixture proportions of FR-SCRMs mortars and substrate concrete.

Table 4 presents the composition and labeling of the patch repair mortar mixtures. In the two patch repair mortar mixtures FR-SCRM1 and FR-SCRM2, cement was replaced with quarry dust limestone and natural pozzolana by 10% and 20%, respectively. After some preliminary investigations, the water-to-powder ratio (w/p) selected as 0.40 and the total powder content was fixed at 685 kg/m^3. In the three mortar mixtures, the volume fraction of the polypropylene fiber (PPF) was kept constant at 0.03%.

The substrate concrete (C) prepared in this study is a common concrete typically used by Algerian construction companies. The mix proportion of the substrate is also presented in Table 3.

2.3 Mixing Sequence

The production of all patch repair materials followed the mixing sequence to achieve similar homogeneity of all mixtures. A standard mixer with a capacity of 5 liters was used. The sand, cement, and natural perlite powder, if applicable, were added to the mixer bowl. During mixing for 2.0 min, two-thirds of the mixing water was added slowly.

The superplasticizer diluted in the remaining water was then added, and mixing was continued for additional 3.0 min. During the mixing, the PPF were dispersed manually in the mixture according to the technical instructions provided by the manufacturer. Upon the mixing terminal, the fresh tests were conducted.

2.4 Testing Methods

The slump flow diameter using mini-slump cone and flow table, visual indices for bleeding and segregation, and flow time using mini V-funnel test were measured for each of the three mortar mixtures in the fresh state. All these tests were conducted in accordance with the procedures recommended by EFNARC (2005).

The compressive and flexural strengths are the most important criteria for classifying repair material according to the EN 1504-3 (2006). For this purpose, prism specimens measuring 40×40×160 mm were prepared for both compressive and flexural strengths for each repair mortar according to EN 12190-6 (1999). The flexural and compressive strength tests were carried out at the ages of 2, 7 and 28 days. For each patch repair mortar, the compressive strength was determined by taking the average of six test results, whereas the flexural strength was determined as an average of three samples.

For the substrate concrete, the compressive and splitting-tensile strengths were determined using 100 × 200 mm cylinders.

The adhesion between repair mortars and concrete substrate (C) was characterized with slant-shear test according to ASTM C882 (1999). The slant-shear test can represent typical cases in the real structures (Climaco and Regan 1989) and produces reliable results (Knab and Spring 1989).

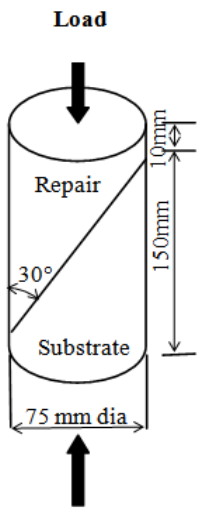

Figure 2: Dimensions of repaired specimen.



Figure 3: Specimen subjected to slant shear.

The specimen used in the slant-shear test consisted of two halves of a cylinder bonded at 30°. One half cast with repair mortars (FR-SCRMs) and bonded to a second half cast with the substrate concrete (Figure 2). The composite cylinder was tested under axial compression. The substrate part of the specimen was cast using plastic molds positioned at 30° inclination angle and cured for 28 days in water. The inclined surface of the samples was treated by wet sandblasting (crushed sand of 1 mm diameter under 7 MPa pressure).

The substrate parts were stored for 1 year in ambient laboratory temperature before casting the FR-SCRMs on top of it. The interfaces of the substrate samples were saturated in water for 6.0

hours and surface dried before casting the FR-SCRMs. The patch repair materials were cast on the top of the substrate concrete specimen and then cured inside polyethylene bags at a relative humidity (RH) of 95±5% and a temperature of 20±2°C. The composite cylindrical samples were topped with a sulphur layer for surface leveling, and then tested in compression according to ASTM C39 at ages of 1, 7, and 28 days (Figure 3). The bond strength using the slant-shear test can be calculated using the following equation.

$$\tau = \frac{F_{max}}{(\pi \times \emptyset^2)} \times 4 \times \sin 30\,^\circ \tag{1}$$

where;
τ: bond strength [MPa]
F_{max}: maximum applied force [kN]
ϕ: diameter of cylinder [mm]

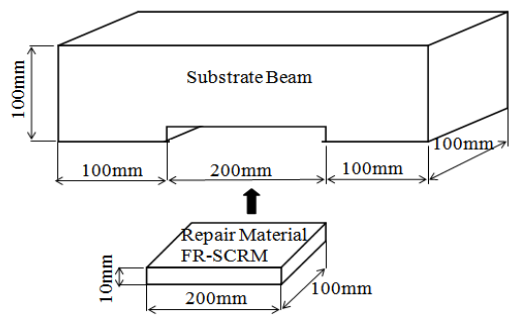

Figure 4: Dimensions of a notched beam serving as a substrate.

Compatibility study between patch repair materials and substrate concrete is very important before selecting a repair material. To evaluate the compatibility of manufactured repair materials, a small prismatic concrete samples (beams) with dimensions of 100 ×100×400 mm were prepared. A notch of 200 mm (length) ×100 mm (width) × 10 mm (thick) was cast into the bottom of the prismatic concrete samples using a 3-dimensional inset to receive patch repair materials (Figure 4).

After 1 day, the beam substrates are removed from their molds and stored in moist rooms at saturated humidity and temperature of 20 ± 2°C until 28 days. Then the samples continue their cure under laboratory conditions for one year. After this period, the notched area was treated by sandblasting with the same pressure as that used in the adhesion test (7 MPa) followed by brushing. Then the repair mortars were cast to fill the notched area. Thus, the obtained composite samples were stored in several environments, illustrated in Figure 5.

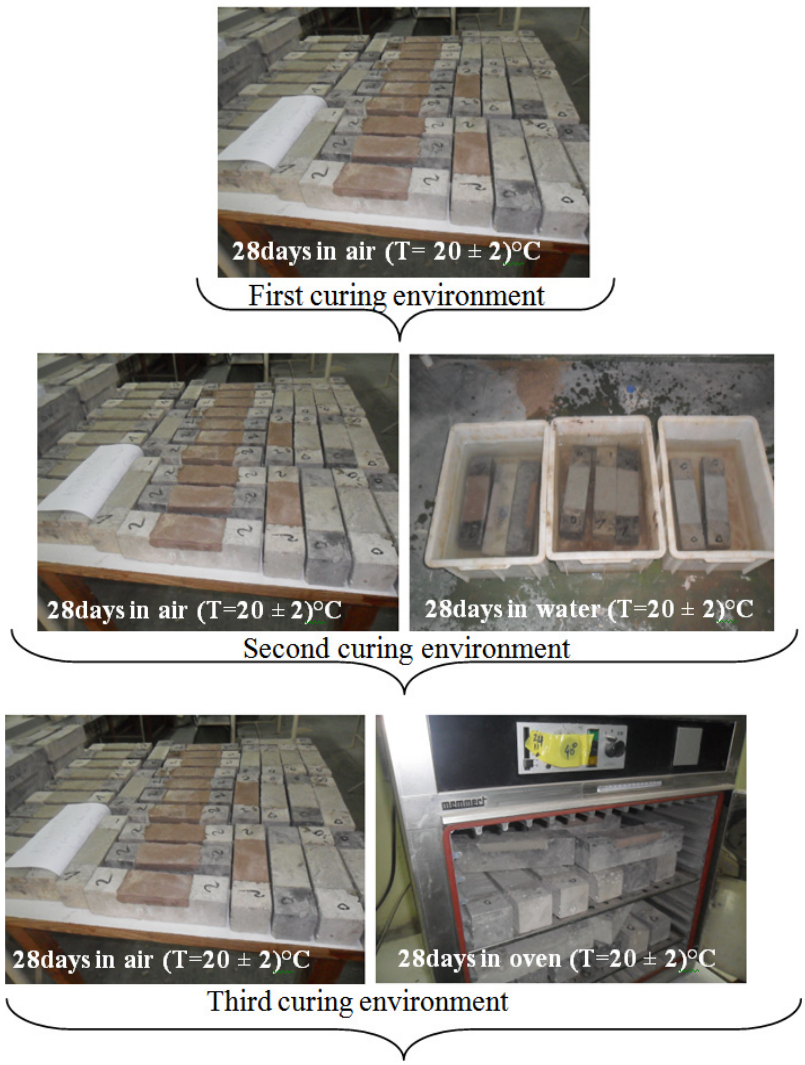

Figure 5: Different types of curing for the composite beams.

To ensure the durability of the repair mortars in the above mentioned curing conditions, the flexural bond strength test by using four-point bending test method was chosen according to ASTM C 78. The faces filled by the repair mortars were placed on the lower side to undergo tensile strength as shown in Figure 6. Assuming that composite has a linear elastic behavior, the flexural bond strength is estimated by the ratio of the fracture load and the surface with an estimated correction factor of 0.6 as described in the following equation.

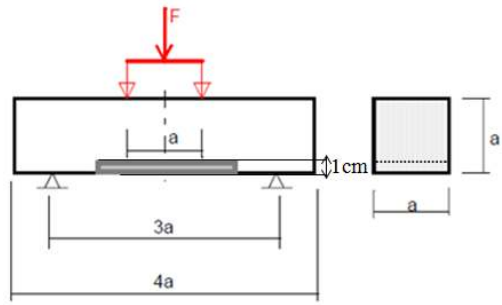

Figure 6: Configuration for four-point bending test.

$$\sigma = \frac{1.8 \times F}{a^2} \tag{2}$$

Where;
σ: Flexural bond strength in (MPa)
F: Fracture load in (kN)
a: Side of the prism in (cm)

In addition, the elaborated patch repair materials were assessed compatible or incompatible with the substrate concrete by the mode of failures. If the failure passes through repair material and substrate at the middle third of the beam, then it is a compatible failure or else the repair material is incompatible with the substrate concrete (Czarnecki et al. 1999, Rashmi and Prasada 2007).

3 RESULTS

The visual inspection of the tree tested mortar mixtures showed no evidence of bleeding or segregation. The other fresh and rheological properties (Slump and V-Funnel flow time) for the tested patch repair materials are detailed in the following sections.

3.1 Mini Slump Flow

The results of the mini-slump flow test for all tested mortar mixtures are shown in Table 5. A target slump flow diameter of 250±10 mm according to EFNARC 2005 for repair mortars was secured by adjusting the HRWRA dosage.

The obtained slump flow diameters were in ranges of 245 to 255mm. The lowest slump flow diameter was measured for the patch repair mortar FR-SCRM1 followed by the FR-SCRM0, while the FR-SCRM2 had the highest value.

The required HRWRA dosage to achieve the target slump flow for FR-SCRM1 (with 10% QDL) decreased by about 1.0 liter compared to the control (Table 5). The reason for lower superplasticizer demand for the FR-SCRM1 may be attributed to the lower cement content (where the superplasticizer is needed to disperse) and the higher fineness of the QDL filler particles (450 m^2/kg) compared to the cement, which enhanced the packing density of cement, leading to decreasing the retained water in the mortar skeleton. This was found in agreement with the conclusions of Fujiwara et al. (1996) and Ellerbrock and Spung (1990).

Repair mortars	Mini Slump (mm)	EFNARC[1] Specifications	Mini V-funnel (sec)	EFNARC[1] Specifications
FR-SCRM0	250	Between 240 to 260 mm	8.3	Less than 11 seconds
FR-SCRM1	245		7.0	
FR-SCRM2	255		7.6	

[1] EFNARC: European Federation of National Associations Representing for Concrete

Table 5: Fresh properties of FR-SCMs.

However, FR-SCRM2 required slightly higher superplasticizer dosage (0.83 kg/m^3) than that used for the FR-SCRM0 mixture to achieve desired slump flow. This can be attributed to the NP particles of the higher fineness area (600 m^2/kg).The effect of the higher particle fineness overcame the positive effect of its spherical shapes. Indeed, the spherical shape of NP particles was reported to improve the workability and reduce friction at the aggregate-paste interface producing a ball-bearing effect at the point of contact, resulting in higher fluidity of the paste (Wei et al. 2003).

3.2 Mini V-Funnel Flow Time

The flow time results obtained from the mini V-Funnel test were found to vary between 7 and 8.3s for the three FR-SCRMs mixtures, as shown in Table 5. The use of 10% QDL or 20% NP was observed to decrease the flow time (7.0 and 7.6s for FR-SCRM1 and FR-SCRM2, respectively) compared to that of 8.3s for the FR-SCRM0. However, all investigated patch repair materials FR-SCRMs satisfied the allowable flow-time requirements (greater than 7s) (EFNARC 2005).

The decrease of the flow time noted for the patch repair mortars FR-SCRM1 and FR-SCRM2 compared to that of the FR-SCRM0 can be attributed to the decrease of the lower force driving the flow that decreased due to the decrease of the mortar density when incorporating mineral admixtures with low densities (Bogas et al. 2012).

3.3 Compressive and Flexural Strengths

The results of the compressive and flexural strengths for the studied patch repair mortars FR-SCRMs showed continuous increase with age, as shown in Figures 7 and 8, respectively. At all ages, the compressive strength of the FR-SCRM1 and FR-SCRM2 mortars were lower than that of the FR-SCRM0. The higher compressive strength was reported for the FR-SCRM0, followed by the FR-SCRM2, and then the FR-SCRM1, except for the first day of curing, the strength of FR-SCRM1 was comparable to that of the FR-SCRM0.

After one day of curing, the reductions in the compressive strength values for the patch repair mortars FR-SCRM1 and FR-SCRM2 compared to the FR-SCRM0 were 3% and 26%, respectively. At this age, the replacement of cement with 10% QDL in FR-SCRM1 had good influence on the compressive strength than that obtained by replacing of cement by 20% NP in FR-SCRM2. This was probably due to the fineness of QDL particles and the amount of the tricalcium aluminate

(C_3A). Indeed, the $CaCO_3$ reacts with the alumina phases of the cement (C_3A and C_4AF) to form calcium carboaluminate ($C_3A.CaCO_3.11H_2O$) (Vuk et al. 2000). This reaction accelerating the hydration of C_3S and increasing the compressive strength of the FR-SCRM1 mortar, at the early age (one day). This finding was consistent with that obtained by Care et al. (2000) and Temiz et al. (2014).

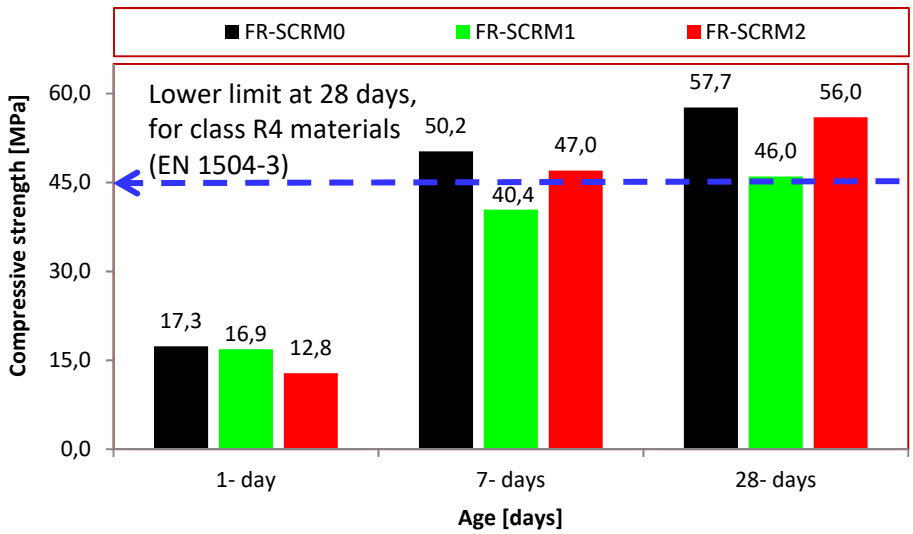

Figure 7: Compressivel strength results for tested FR-SCRMs at 1, 7, and 28 days.

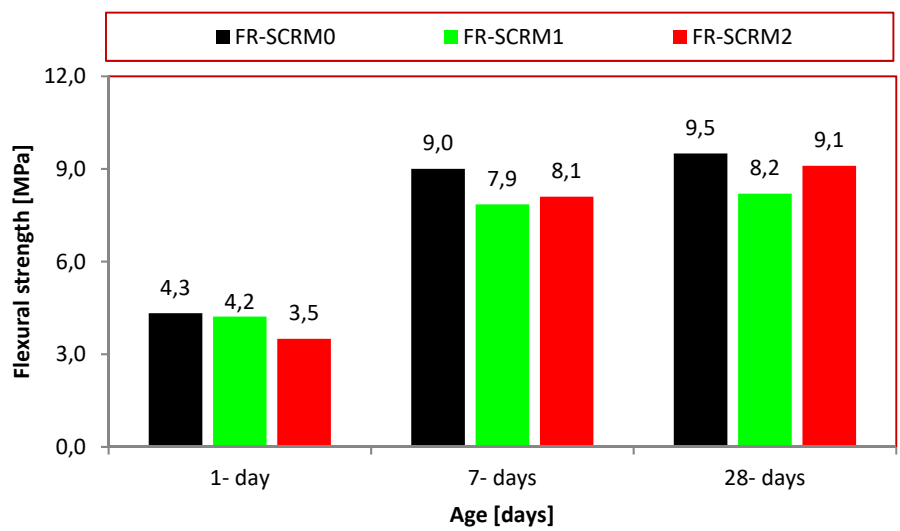

Figure 8: Flexural strength results for tested FR-SCRMs at 1, 7, and 28 days.

On the other hand, the decrease in the compressive strength of the FR-SCRM2 at this early age (one day) can be attributed to the dilution effect (Lemonis et al. 2015). Many researchers have reported that replacing cement by NP reduces the strength at the early curing period (Ghrici et al. 2006, Shannag 2000).

After seven days of curing, the FR-SCRM2, exhibited significantly higher compressive strength than that of the FR-SCRM1. The reductions in compressive strength values for the FR-SCRM1 and FR-SCRM2 compared to the FR-SCRM0 were19% and 6%, respectively. The short-term strength (at seven days) of FR-SCRM1 can be attributed mainly to the lower reactivity and fineness ($450m^2/kg$) of the QDL particles compared to that of the NP particles (Saridemir 2013). Indeed, the surfaces of the NP particles act as nucleation sites for the early reaction products of CH (C=CaO and H=H_2O) and C-S-H (C=CaO; S=S_iO_2 and H=H_2O), which accelerate the hydration of cement and therefore improve the compressive strength (Guru et al. 2013). In the same way, at 28 days of curing, the reductions in compressive strength values of FR-SCRM1 (with QDL) and SCRM2 (with NP) compared to the FR-SCRM0 were 20% and 3%, respectively. The FR-SCRM2 had slightly lower reduction in the compressive strength (3%) compared to the FR-SCRM2 that can be attributed to the higher volume of C-S-H formed during cement hydration. The large reduction in the compressive strength of FR-SCRM1 (28%) than the control may be attributed mainly to its low reactivity.

In summary, all of the patch repair mortars had 28-day compressive strength values higher than 45 MPa, fulfilling the requirements for Class R4 materials according to the standards EN 1504-3.

The evolution of the flexural strength (Figure 8) with time was similar to that observed in the case of the compressive strength. It is observed that the replacement of cement by 10% QDL in FR-SCRM1 reduced the flexural strength values of FR-SCRM1 compared to the SCRM0 by about 3%, 12%, and 14% at 1, 7, and 28 days, respectively. At the same ages, the cement replacement by 20% NP in FR-SCRM2 resulted in 19%, 10%, and 4% reductions in the flexural strength values, respectively. Additionally, the improvement of the flexural strength reported for the FR-SCRM2 was mainly referred to the higher fineness (see Table 1) and the pozzolanic activity of the NP. These two parameters govern the adhesion between the cement paste and the fine aggregate. The strength increase in mortars systems containing pozzolanic materials as it plays a key role in improving the aggregate-paste bond by the densification of the transition zone and formation of more calcium silicate hydrates (Shannag 2000). In this research, NP has higher fineness than the QDL in addition to its pozzolanic activity, resulting in higher flexural strength of the patch repair mortar FR-SCRM2 compared to the FR-SCRM1.

3.4 Bond Strength by Slant Shear Test

The slant-shear strength results determined after 1, 7, and 28 days of curing for the composite cylindrical specimens (FR-SCRMs/C) are presented in Figure 9.

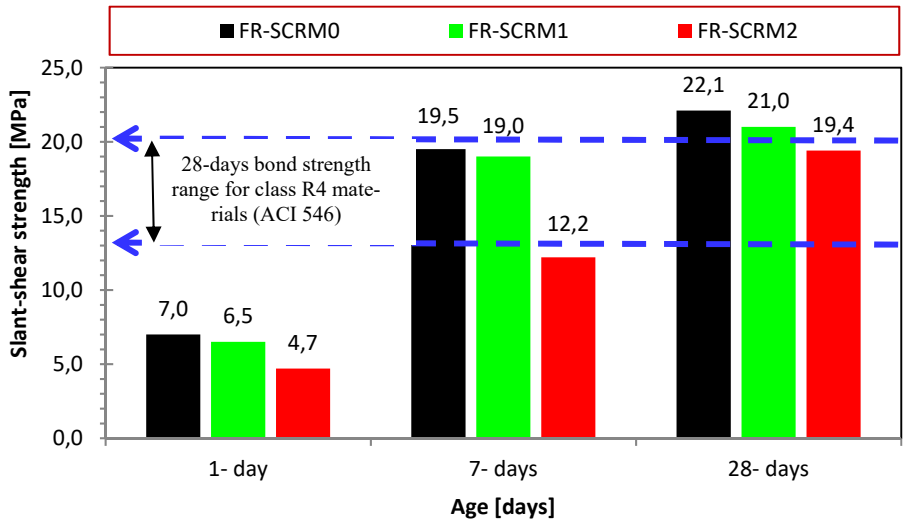

Figure 9: Slant shear strength for composite cylinders (FR-SCRMS/C) at 1, 7, and 28 days.

At all testing ages, the use of 10% QDL in the patch repair mortar FR-SCRM1 had a remarkable effect on mortar slant-shear strength than using 20% NP in FR-SCRM2. After one day of curing, the reductions in slant-shear strength values of FR-SCRM1/C and FR-SCRM2/C compared to the FR-SCRM0/C were 6% and 32%, respectively. This can be attributed to the difference in maturity of the patch repair mortars (Şahmaran et al. 2013). After seven days of curing, the use of QDL in FR-SCRM1 also exhibited a significant improvement in the slant-shear strength development of FR-SCRM1/C than that of the NP in the FR-SCRM2/C. The reductions in slant-shear strength values at this age for the composites FR-SCRM1/C and FR-SCRM2/C compared to the FR-SCRM0/C were 3% and 38%, respectively. The significant improvement in the slant-shear strength values of FR-SCRM1/C composite specimens was probably attributed to the large sizes of the QDL particles compared to the NP particles. After 28 days of curing, the use of QDL in FR-SCRM1 was also beneficial in terms of slant-shear strength. Indeed, the slant-shear strength of FR-SCRM1/C increased slightly compared to the 7-day results and exceeded the values determined for the FR-SCRM2/C. The reductions in slant-shear strength values of FR-SCRM1/C and FR-SCRM2/C compared to the FR-SCRM0/C were 6% and 12%, respectively. This might increase the friction at the interface, leading to an improvement in the slant-shear strength (Aliabdo and Elmoaty 2012). The significant development of the slant-shear strength after 28 days of curing for the FR-SCRM2/C (with NP) can be attributed to the improvement of the microstructure specially at the interfacial transition zone between the patch repair mortar FR-SCRM2 and substrate concrete (C). In fact, the improvement of the microstructure was not governed only by the pozzolanic activity of the NP, but also by the ability of the finer NP particles to fill up the gaps between the cement particles, leading to significant increases of the intermolecular force and mechanical interlocking (Guangjing et al. 2002).



(a) (b) (c)

Figure 10: Mode of failure for composite specimens in slant-shear test: (a) Failure on slant surface, (b) Failure of substrate and repair material (7-days) and (c) Failure of substrate (28-days).

Three different failure modes were observed during the slant-shear test, as presented in Figure 10. For the test after one day of curing, the failure type for all FR-SCRMs/C was interface separating. At seven days, a monolithic failure mode appeared with the propagation of crack through the repair mortars and the substrate concrete for all specimens. The substrates were noticed to be completely damaged; however, few cracks were observed within the repair mortars. At an age of 28 days, all the FR-SCRMs/C composites showed serious failure through the substrate concrete (C), which showed clearly that the substrate was weaker than the repair mortars. In summary, all the repair mortars have considerably greater slant-shear strength values than the lower limit of slant-shear strength values specified by the ACI (Concrete Repair Guide-ACI 546R-2004), at all testing ages.

3.5 Flexural Bond Strength

It is well established that a beam having higher thickness or higher strength material deflects less in bwnding compared to a beam with lower thickness or lower strength material under the same load. If the repair material is compatible with the substrate concrete (compressive strength of repair material divided by compressive strength of substrate concrete is greater than 1.0), the load transfer to repair material is adequate and the failure mode occurs in the middle-third of the notched beam.

From Table 6, it can be seen that for the three curing conditions, mortars containing 20% NP have a positive effect on the development of the flexural bond strength of notched beam filled with a 1.0-cm thick layer by FR-SCRM2 (composite beam 2) than that filled with the same thickness by FR-SCRM1 (composite beam 1). In first curing environment (28 days in the air at 20°C), the composite beams 1 and 2 showed reductions in flexural bond strengths of 12.20% and 7.04%, respectively, compared to the control beam. In the same way, it can be observed that the composite beams cured in the second environment showed better flexural bond strengths values than those of beams cured in the third curing environment. Also the composite beams 1 and 2, cured in the second curing environment showed decreases in flexural bond strengths compared to the control beam of 8.33% and 3.52%, respectively. However, these decrease reached 9.40% and 4.88% when the samples were cured under the third environment.

Beams	Flexural bond strength [MPa]		
Curing environment	First curing environment	Second curing environment	Third curing environment
Control beam	2.1	3.1	2.7
Composite beam 1 (filled with 1 cm composite containing 10% QDL)	1.9	2.9	2.4
Composite beam 2 (filled with 1 cm composite containing 20% NP)	2.0	3.0	2.5

Table 6: Results of flexural bond strength.

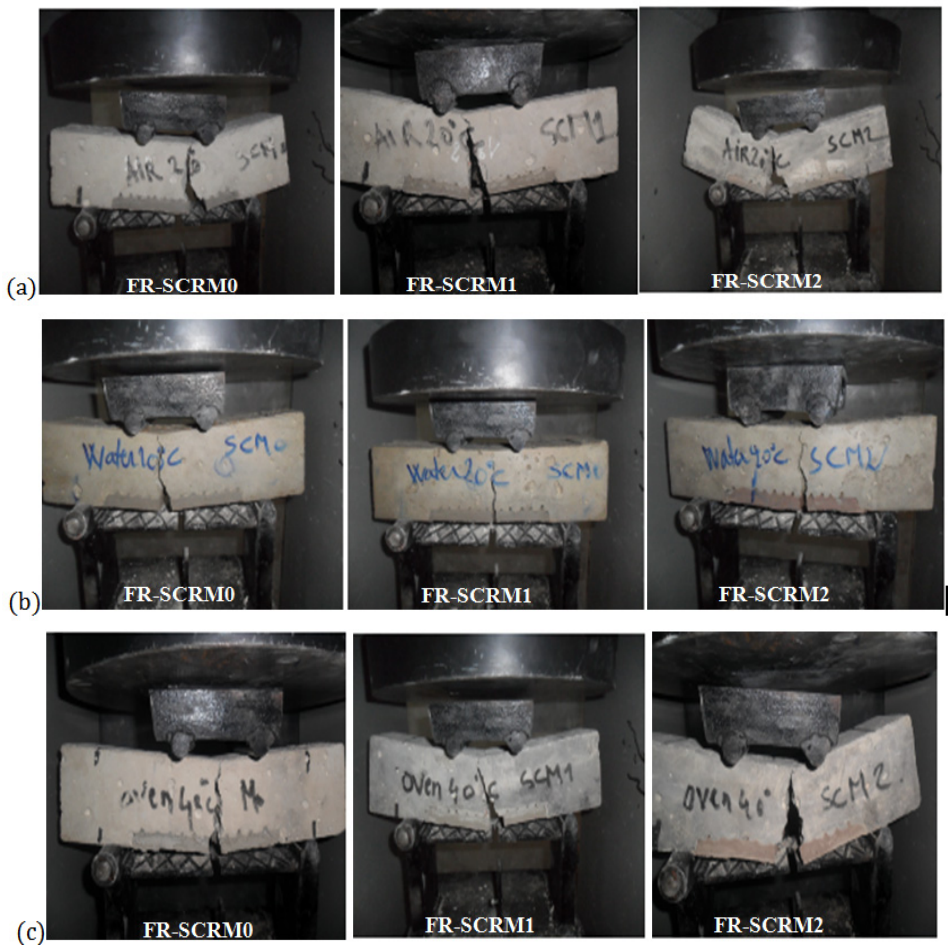

Figure 11: Compatibility evaluation: (a) First curing environment (compatibles), (b) Second curing environment (compatibles), and (c) Third curing environment (compatibles).

Photos shown in Figure 11 indicate one type of failure mode of composite beams filled with the same layer thickness (1 cm) by FR-SCRM0, FR-SCRM1, and FR-SCRM2 that were stored in three curing conditions. This Figure shows that fractures have been occurred near the mid-span and no de-bonding has been observed for composite beams repaired by the patched repair materials. There-

fore, the composite beams are considered compatibles (Czarnecki et al. 1999, Rashmi and Prasada 2007). Such behavior can be attributed to the continuous densification of micro-structure of the interfacial transition zone (ITZ), due to the filler effect and long-term pozzolanic reactions (Scrivener and Gartner 1988, Ollivier and Maso 1995, Leemann and Munch 2006). In summary, the use of 10% QDL in FR-SCRM1 or 20% NP in the FR-SCRM2 can successfully ensure the durability of the repair mortars, applied with 1 cm thick layers in the given curing conditions which was an important aspect to be considered in construction (Ramli and Tabassi 2012).

4 CONCLUSIONS

This study demonstrates that it is possible to successfully using local mineral fillers, like quarry-dust limestone (QDL) and natural pozzolana (NP), to produce self consolidating repair mortars. It is to highlight that cement can be partially replaced by theses fillers while maintaining the Standard specifications for the patch repair mortar in terms of flowability, strength, durability, and adhesion. From this investigation, the following conclusions can be drawn:

- Using of 10% QDL in the FR-SCRM1 mixture, resulted in slightly decreased in the SP dosage, compared to the FR-SCRM0 control mixture, to get the desired target flowability (no vibration, stable and without segregation) of the prepared repair mortars mixtures (FR-SCRM$_s$). And vice-versa, for the addition of 20% NP in the FR-SCRM2 mixture. It is important to note that the shape and fineness of fillers have a significant effect on superplasticizer dosage.
- In term of compressive strength, all the patch repair mortars tested in this study fulfill the requirement for Class R4 according to the standards EN 1504-3 for compressive strength (45MPa at 28 days). At early age (one day), the 10% QDL is more effective than 20% NP; however, at 28 days, the mixes incorporating NP developed more strength and resulted in approximately similar strength of the control mixture due to the fineness and pozzolanic reactivity of the NP.
- The 28-days slant shear strength values obtained for all the composite cylinders satisfied the requirement of bond strength as per ASTM specifications. Moreover, the bond strength of the composite repaired by FR-SCRM1 repair material was more than that repaired by FR-SCRM2. The strength enhancement of FR-SCRM1 (1.5 MPa) is due to the large particles size of QDL, which might increase the friction at the interface.
- According to the flexural bond strength experiments, all the substrate beams repaired by manufactured repair materials with 1 cm thickness of mortar layer and stored in three curing conditions, showed that fractures have been occurred near mid span and no de-bonding has been observed. Hence, all the patch repair materials are considered compatibles in given curing conditions. In addition to this, the second curing environment (moist cure) is adequate to carry out durable repairs of concrete by these repair mortars, because of the high bond strengths of the composites in this environment compared to the other ones.

References

ACI Committee 546. (2004). Concrete repair guide (ACI 546R-04). American Concrete Institute, Farmington. Hills. Mich., 53.

Aliabdo, A., Elmoaty, M A. (2012). Experimental investigation on the properties of polymer modified SCC. Construction and Building Materials 34:584–92.

American Concrete Insitute. (1975). Durability of Concrete. Publication SP-47.

ASTM C39. (2003). Standard Test Method for Compressive Strength of Cylindrical Concrete Specimens. American Society for Testing and Materials.

ASTM C618. (2012). International. Standard specification for coal fly ash and raw or calcined natural pozzolan for use in concrete. in ASTM Standard. West Conshohocken: American Society for Testing and Materials.

ASTM C78/C78 M. Standard test method for flexural strength of concrete (Using simple beam with third-point loading). ASTM international.

ASTM C882. (1999). Standard test method for bond strength of epoxy-resin systems used with concrete by slant shear. American Society for Testing and Materials.

Behfarnia, K., Farshadfar, O. (2013). The effects of pozzolanic binders and polypropylene fibers on durability of SCC to magnesium sulfate attack. Construction and Building Materials 38:64-71.

Benjeddou, O., Ben Quezdo, M., Bedday, A. (2007). Damaged RC beams repaired by bonding of CFRP laminates. Construction and Building Materials 21:1301-10.

Bogas, JA., Gomes, A., Pereira, MFC.(2012). Self-compacting lightweight concrete produced with expanded clay aggregate. Construction and Building Materials 35:1013–22.

Care, S., Linder, R., Baroghe, L., Bouny, V., Delarrad. (2000). Effect of mineral additions on the use properties of concretes experimental design and static analysis. LCPC, engineering structure OA 3:102.

Climaco, J., Regan, P. (1989). Evaluation of bond strength between old and new concrete. In: Forde M, editor. International conference on structural faults and repair, London: Engineering Technics Press 1:115–22.

Cochet, G., Sorrentino, F. (1993). Limestone filled cements properties and uses. In: S.L. Sarkar, S.N. Ghosh (Eds.), Mineral Admixtures in Cement and Concrete, New Delhi. ABI Books 4: 266-95.

Courard, L., Darimont, A., Willem, X., Geers, C., Degeimbre, R. (2002). Repairing concretes with self-compacting concrete: testing methodology assessment. In: Proceedings of the first North American conference on the design and use of self-consolidating concrete 267-74.

Cyr, M., Legrand, C., Mouret, M. (2000). Study of the shear thickening effect of superplasticizers on the rheological behavior of cement paste containing or not mineral admixtures. Cement and Concrete Research 30: 1477-83.

Czarnecki, L.,. Garbacz, A.,. Lukowski, P .(1999). Polymer composites for repairing of Portland cement concrete-Compatible project. NISTIR 6394. Building and Fire Research. Labo. NIST, Gaithersburg, Md.

Dawood, E.T., Ramli M. (2014). The effect of using high strength flowable system as repair material. Composite. Part B 57: 91-95.

EFNARC. (2005). The European guidelines for self-compacting concrete: specification, production and use. European federation for specialist construction chemicals and concrete systems.

Ellerbrock, HG., Spung, S. (1990). Particle size distribution and properties of cement: part III influence of grinding process. Zement Kalk Gips 43:13–19.

Emmons, P., Vaysburd, A. (1996). Total system concept-necessary for improving the performance of repaired structures. Construction and Building Materials 10: 69-75.

EN 12190-6. (1999). Products and systems for the protection and repair of concrete structures-Test methods- Determination of compressive strength of repair mortar.

EN 1504-3 (2006). Products and systems for the protection and repair of concrete structures. Definitions, requirements, quality control and evaluation of conformity. Structural and non-structural repair.

EN 197-1. (2000). Cement, Composition, specifications and conformity criteria for common cements.

EN 934-2. (2009). Admixtures for concrete, mortar and grout-Part 2: Concrete admixtures - Definitions, requirements, conformity, marking and labeling".

Erdoğan, T.Y. (1997). Admixture for Concrete. METU. Press Ankara, Turkey.

Ezziane, K., Bougara, A., Kadri, A., Khelafi, H., Kadri, E. (2007). Compressive strength of mortar containing natural pozzolan under various curing temperature. Cement and Concrete Composite 29:587-93.

Ferraris, C., Brower, L., Ozyildirim, C., Daczko, J. (2000). Workability of self-compacting concrete. National institute of standards and technology (NIST). In: Proceedings of international symposium on high performance concrete; Orlando, Floridas 398-07.

Fujiwara, H., Nagataki, S., Otsuki, N., Endo, H.(1996). Study on reducing unit powder content on high-fluidity concrete by controlling powder particle size distribution. J. Japan Society of Civil Engineering 30:117–27.

Ghrici, M., Kenai, S., Said Mansour, M., Kadri E. (2006). Some engineering properties of concrete containing natural pozzolana and silica fume. Journal. of Asian Architecture and Building Engineering 5: 349-54.

Ghrici, M., Kenai, S.and Said-Mansourc, M. (2007). Concrete containing natural pozzolana and limestone blended cements. Cement and Concrete Composites 29:542-49.

Guangjing, Xi., Jinwei, Li., Gengying, Li., Huicai, Xi. (1881). A way for improving interfacial transition zone between concrete substrate and repair materials. Cement and Concrete Research 32:1877–81.

Guru, J.J., Sashidhar, C., Ramana, R.I.V., Annie, P.J. (2013). Micro and macrolevel properties of fly ash blended self-compacting concrete. Materials and Design 46:696–05.

Ho, DWS., Shein, AMM., CC, NG., Tam, CT. (2002). The use of quarry dust for SCC applications. Cement and Concrete Research 32:505-11.

Jummat, M., Kabir, M., Obaydollah, M. (2006). A review of the repair of reinforced concrete beams. Journal of Applied Science and Research 2: 317-26

Kaid, N., Cyr, M., Julien, S., Khelafi, H. (2009). Durability of concrete containing a natural pozzolan as defined by a performance- based approach. Construction and Building Materials 23:3457-67.

Khayat, K.H., Morin, R. (2002). Performance of self-consolidating concrete used to repair Parapet Wall in Montreal. Proceedings of the First North American Conference on the Design and Use of Self-Consolidating Concrete 475-81.

Knab, L., Spring, C. (1989). Evaluation of test methods for measuring the bond strength of portland cement based repair material to concrete. Cement and Concrete Aggregates 11: 3–14.

Lee, M.G., Wang, Y.C., Chiu, C.T. (2007). A preliminary study of reactive powder concrete as a new repair material. Construction and building Materials 21: 182-89.

Leemann, A., Munch B., (2006). Influence of compaction on the interfacial transition zone and the permeability of concrete. Cement and Concrete Research 36: 1425-33.

Lemonis, N., Tsakiridis, P.E., Katsiotis, N.S., Antiohos, S., Papageorgiou, D., Katsiotis, M.S., Beazi-Katsioti, M. (2015). Hydration study of ternary blended cements containing ferronickel slag and natural pozzolan. Construction and Building Materials 81:130-39.

Liu, C.T., Huang, J.S. (2008). Highly flowable reactive powder mortar as a repair material. Construction and Building Materials 22: 1043-50.

Mehta, PK. (1981). Studies on blended Portland cements containing Santorin earth. Cement and Concrete Research 11: 507-18.

Okamura, H., Ouchi, M. (2003). Self-compacting concrete. Journal of Advanced Concrete research Technology 1:5-15.

Ollivier, J. P., Maso, J.C., (1995). Interfacial transition zone in Concrete. Adv. Cement and Base Materials 2: 30-38.

Ramezanianpour, A.A. (1987). Engineering properties and morphology of pozzolanic cement-concrete. PhD Thesis University of Leeds 1987.

Ramli, M.,.Tabassi, A.A.(2012). Influences of polymer modification and exposure conditions on chloride permeability of cement mortars and composites. Journal of Materials in Civil Engineering 24: 216–22

Rashmi, R.P.and Prasada, R.R.(2007). Analysis of compatibility between repair material and substrate concrete using simple beam with third point loading. Journal of Materials in Civil and Engineering 19: 1060–69.

Saheed, A., Shamsad, A., Maslehuddin, M., Al-Gahtani, HJ. (2015). Properties of SCC prepared using natural pozzolana and industrial wastes as mineral fillers. Cement and Concrete Composite 62:125-33.

Sahmaran, M., Christianto, HA., Yaman, O. (2006). The effect of chemical admixtures and mineral additives on the properties of self-compacting mortars. Cement and Concrete Composite 28:432-40.

Şahmaran, M., Yücel, H., Al-Emam, M., Yaman, IO., Güler, M. (2013). Bond characteristics of engineered cementitious composites overlays. TRB: Annual. Meeting.

Sarıdemir, M. (2013). Effect of silica fume and ground pumice on compressive strength and modulus of elasticity of high strength concrete. Construction and Building Materials 49:484–89.

Scrivener, K. L., Gartner, E.M. (1988). Microstructure gradients in cement paste and aggregate particles in bonding in cementitious composites. Materials Research Society Symposium Proceedings 114: 77-87.

Shamsad, A., Saheed, A., Maslehuddin, M., Kalam, A. (2014). Properties of self-consolidating concrete made utilizing alternative mineral fillers. Construction and Building Materials 68:268-76.

Shannag, M J. (2000). High strength concrete containing natural pozzolan and silica fume. Cement and Concrete Composites 22:399-06.

Shannag. MJ., Yeginobali, A. (1995). Properties of pastes, mortars and concretes containing natural pozzolan. Cement and Concrete Research 25:647-57.

Temiz, H., Kantarcı, F. (2014). Investigation of durability of CEM II B-M mortars and concrete with limestone powder, calcite powder and fly ash. Construction and Building Materials. 68:517–24.

Torkaman, J., Ashori, A., Momtazi, A.S. (2014). Using wood Fiber Waste, Rice Husk and limestone powder waste as cement replacement materials for lightweight concrete blocks. Construction and Building Materials 50:432- 36.

Vuk, T., Tinta, V., Gabrovšek, R., Kaučič, V. (2000). The effects of limestone addition, clinker type and fineness on properties of Portland cement. Cement andConcrete Research 30:135–39.

Wei, S., Handong, Y., Binggen, Z. (2003). Analysis of mechanism on water-reducing effect of fine ground slag, high-calcium fly ash, and low calcium fly ash. Cement and Concrete Research 33:1119–25.