Latin American Journal of Solids and Structures
www.lajss.org

Free Vibration Characteristics of the Conical Shells Based on Precise Integration Transfer Matrix Method

Abstract
Based on transfer matrix theory and precise integration method, precise integration transfer matrix method (PITMM) is advanced to research free vibration characteristics of the conical shells. The influences of the boundary conditions, the shell thickness and the semi-vertex conical angle on vibration characteristics are discussed. Based on Flügge thin shell theory and transfer matrix method, field transfer matrix of conical shells is obtained. According to the boundary conditions at ends of the conical shell, natural frequencies of the conical shell are solved by precise integration method. The approach of studying free vibration characteristics of the conical shells is obtained. Contrast of natural frequencies from the paper and previous literature, the method of the paper is confirmed. On this basis, the effects of the boundary conditions, the shell thickness and the semi-vertex conical angle on vibration characteristics are presented.

Keywords
Conical shells, Precise integration, Transfer matrix, Vibration; Natural frequency

Chuang Wu [a, b, *]
Fuzhen Pang [c]

[a] State Key Laboratory of Mechanical System and Vibration, Shanghai Jiao Tong University, Shanghai, 200240, P. R. China. wuchuang1990@sjtu.edu.cn
[b] Institute of Vibration Shock and Noise, Shanghai Jiao Tong University,
Shanghai, 200240, P. R. China.
[c] College of Shipbuilding Engineering, Harbin Engineering University, Harbin, Heilongjiang, 150001, P. R. China. pangfuzhen@hrbeu.edu.cn

* Corresponding author

http://dx.doi.org/10.1590/1679-78253971

Received 26.04.2017
In revised form 29.08.2017
Accepted 21.09.2017
Available online 30.09.2017

1 INTRODUCTION

In the field of modern military defense, cylindrical shells and conical shells are basically simplified model of many weapons and equipment, such as: aircraft, missiles, submarines and so on. The studies of free vibration characteristics of cylindrical shells are comprehensive. Initially, Kana DD (1968), Bolotin VV (1964) and Koutunvov VB (1993) investigated cylindrical shell through classical thin shell theories (such as: Donnell equations, Kennard equations, Flügge equations and Sander-Koiter equations). Harari, Sandman Laulagnet and so on were representative scholars in the field. Initially, Rayleigh (1945) did pioneering study of free vibration characteristics of cylindrical shell. Research of free vibration characteristics of cylindrical shell is made general comments in Leissa (1973) literary work. The method of studying free vibration characteristics of conical shell is developing. Free vibration characteristics of conical shell at simply-simply boundary condition is examined through Statistical Energy Analysis by Crenwelge (1969), Talebitooti (2010) and Li F. M (2009) analyze free vibration characteristics of conical shell by Rayleigh-Ritz method. kp-Ritz method is used to consider conical shell in Liew paper (2005). Guo (1994) applies multiple factor method to discuss free vibration characteristics of conical shells Unlike cylindrical shell, section radius of conical shell will vary in the axial direction, which increases complexity and difficulty in studying of conical shell. So far, approximate solution of natural frequencies of conical shell is merely obtained. The paper applies a new method to analyze the free vibrational characteristics of the conical shells, which is different from the approach in previous literature. The method is referred to as PITMM. Based on Flügge thin shell theory, equations of motion for cylindrical and conical can be derived. Coefficient matrix in the equations of motion for cylindrical and conical is calculated used precise integration method. To absorb matrix assembly thought from FEM, total transfer matrix of the conical shell is constructed. According to the boundary conditions, natural frequencies of the conical shell are solved. Then, the paper presents the contrast of natural frequencies from the paper and previous literature, FEM, and describes the effects of the boundary conditions, the shell thickness and the semi-vertex conical angle on free vibrational characteristics of the conical shell.

CC BY

2 EQUATIONS OF MOTION

2.1 Equations of Motion for Cylindrical Shell

The shell deformation is expounded by thin shell theory that is based on linear assumptions. To obtain precise results, relatively accurate Flügge shell theory is used in the paper. The force balance equation is obtained by analyzing cylindrical shell micro-element stress. In this paper, equations are based on the kinetic theory. So, many terms include time items. With the purpose of facilitate the writing and derivation, dynamic response time items $e^{-i\omega t}$ is omitted in writing hereinafter. Cylindrical shell coordinates system (γ, φ , χ) and displacement positive direction are shown in Figure 1.

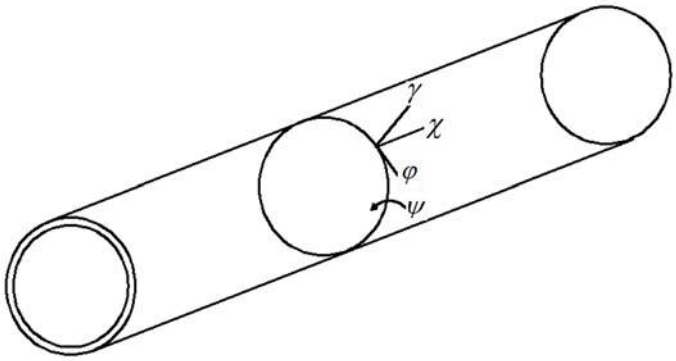

Figure 1: Coordinate system of cylindrical shell.

On the ground of Flügge shell theory [11], force balance equation of cylindrical shell is given:

$$\frac{\partial N_x}{\partial x}+\frac{1}{R}\frac{\partial N_{\theta x}}{\partial \theta}+\rho h\omega^2 u=0 \tag{1}$$

$$\frac{1}{R}\frac{\partial N_\phi}{\partial \theta}+\frac{\partial N_{x\theta}}{\partial x}-\frac{Q_\theta}{R}+\rho h\omega^2 v=0 \tag{2}$$

$$\frac{N_\theta}{R}+\frac{\partial Q_x}{\partial x}+\frac{1}{R}\frac{\partial Q_\theta}{\partial \theta}-\rho h\omega^2 w=0 \tag{3}$$

$$Q_\theta=\frac{1}{R}\frac{\partial M_\theta}{\partial \theta}+\frac{\partial M_{x\theta}}{\partial x} \tag{4}$$

$$Q_x=\frac{\partial M_x}{\partial x}+\frac{1}{R}\frac{\partial M_{\theta x}}{\partial \theta} \tag{5}$$

Among of them, Kevin-Kirchhoff membrane forces, shear and all internal forces are

$$V_x=N_{x\theta}-\frac{M_{x\theta}}{R} \tag{6}$$

$$S_x=Q_x+\frac{1}{R}\frac{\partial M_{x\theta}}{\partial \theta} \tag{7}$$

$$N_x=D(\frac{\partial u}{\partial x}+\frac{\mu}{R}(\frac{\partial v}{\partial \theta}+w))-\frac{K}{R}\frac{\partial \psi}{\partial x} \tag{8}$$

$$N_\theta=D(\frac{1}{R}(\frac{\partial v}{\partial \theta}+w)+\mu\frac{\partial u}{\partial x})+\frac{K}{R^3}(w+\frac{\partial^2 w}{\partial \theta^2}) \tag{9}$$

$$N_{x\theta}=\frac{1-\mu}{2}D(\frac{1}{R}\frac{\partial u}{\partial \theta}+\frac{\partial v}{\partial x})+\frac{K}{R^2}\frac{1-\mu}{2}(\frac{\partial v}{\partial x}-\frac{\partial \psi}{\partial \theta}) \tag{10}$$

$$N_{\theta x}=\frac{1-\mu}{2}D(\frac{1}{R}\frac{\partial u}{\partial \theta}+\frac{\partial v}{\partial x})+\frac{K}{R^2}\frac{1-\mu}{2}(\frac{1}{R}\frac{\partial u}{\partial \theta}+\frac{\partial \psi}{\partial \theta}) \tag{11}$$

$$M_x = K(\frac{\partial \psi}{\partial x} + \frac{\mu}{R^2}\frac{\partial^2 w}{\partial \theta^2} - \frac{1}{R}\frac{\partial u}{\partial x} - \frac{\mu}{R^2}\frac{\partial v}{\partial \theta}) \tag{12}$$

$$M_\theta = K(\frac{1}{R^2}w + \frac{1}{R^2}\frac{\partial^2 w}{\partial \theta^2} + \mu\frac{\partial \psi}{\partial x}) \tag{13}$$

$$M_{x\theta} = \frac{1-\mu}{R}K(\frac{\partial \psi}{\partial \theta} - \frac{\partial v}{\partial x}) \tag{14}$$

$$M_{\theta x} = \frac{1-\mu}{R}K(\frac{\partial \psi}{\partial \theta} + \frac{1}{2R}\frac{\partial u}{\partial \theta} - \frac{1}{2}\frac{\partial v}{\partial x}) \tag{15}$$

Where K, D are respectively bending rigidity and membrane rigidity

$$K = \frac{Eh^3}{12(1-\mu^2)} \tag{16}$$

$$D = \frac{Eh}{1-\mu^2} \tag{17}$$

The relationship of radial displacement and slope is

$$\psi = \frac{\partial w}{\partial x} \tag{18}$$

There are sixteen unknown quantities in above equations. To eliminate eight unknown quantities N_θ, $N_{x\theta}$, $N_{\theta x}$, M_θ, $M_{x\theta}$, $M_{\theta x}$, Q_x, Q_θ eight unknown quantities u, v, w, ψ, N_x, M_x, V_x, S_x are retained, which is sectional state vector elements of cylindrical shell. All quantities are processed into dimensionless quantities and expanded to trigonometric series along the circumferential direction.

$$(u, w) = h\sum_{\partial=0}^{1}\sum_{n} h(\overline{u}, \overline{w})\sin n\theta \tag{19}$$

$$v = h\sum_{\partial=0}^{1}\sum_{n} \overline{v}\cos(n\theta + \frac{\alpha\pi}{2}) \tag{20}$$

$$\psi = \frac{h}{R}\sum_{\partial=0}^{1}\sum_{n} \overline{\psi}\sin(n\theta + \frac{\alpha\pi}{2}) \tag{21}$$

$$(N_x, N_\theta, Q_x, V_x) = \frac{K}{R^2}\sum_{\partial=0}^{1}\sum_{n} (\overline{N_x}, \overline{N_\theta}, \overline{Q_x}, \overline{V_x})\sin(n\theta + \frac{\alpha\pi}{2}) \tag{22}$$

$$(N_{x\theta}, N_{\theta x}, Q_\theta, S_x) = \frac{K}{R^2}\sum_{\partial=0}^{1}\sum_{n} (\overline{N_{x\theta}}, \overline{N_{\theta x}}, \overline{Q_\theta}, \overline{S_x})\cos(n\theta + \frac{\alpha\pi}{2}) \tag{23}$$

$$(M_x, M_\theta) = \frac{K}{R}\sum_{\partial=0}^{1}\sum_{n} (\overline{M_x}, \overline{M_\theta})\sin(n\theta + \frac{\alpha\pi}{2}) \tag{24}$$

$$(M_{x\theta}, M_{\theta x}) = \frac{K}{R}\sum_{\partial=0}^{1}\sum_{n} (\overline{M_{x\theta}}, \overline{M_{\theta x}})\cos(n\theta + \frac{\alpha\pi}{2}) \tag{25}$$

Where n is circumferential modal number. Other dimensionless quantities and dimensionless frequency parameter are

$$\xi = \frac{x}{l} \tag{26}$$

$$\bar{l} = \frac{l}{R} \tag{27}$$

$$\bar{h} = \frac{h}{R} \tag{28}$$

$$\lambda^2 = \frac{\rho h R^2 \omega^2}{D} \tag{29}$$

Through complicated simplifying, first-order matrix differential equation of cylindrical shell is obtained.

$$\frac{d\{\boldsymbol{Z}(\xi)\}}{d\xi} = \bar{l}\mathbf{U}(\xi)\{\boldsymbol{Z}(\xi)\} + \{\boldsymbol{F}(\xi)\} - \{\boldsymbol{p}(\xi)\} \tag{30}$$

Where $\boldsymbol{Z}(\xi) = \left\{\bar{u} \quad \bar{v} \quad \bar{w} \quad \bar{\psi} \quad \overline{M_x} \quad \bar{V}_x \quad \bar{S}_{x\varphi} \quad \overline{N_x}\right\}^{\mathrm{T}}$ is state vector of cylindrical shell. $(\bar{u}, \bar{v}, \bar{w})$ are respectively dimensionless quantities of axial displacement(x direction), circumferential displacement (φdirection) and radial displacement (γdirection) $\bar{\psi}$ is a dimensionless slope, $\overline{N_x}$ is a dimensionless membrane force, $\overline{M_x}$ is a dimensionless bending moment, ($\overline{V_x}$, $\overline{S_x}$) are dimensionless Kelvin-Kirchhoff shear force and shear force, E and μ are Young's modulus and Poisson's ratio. $\boldsymbol{Z}(\xi)$ is the shell element's state vector and also a function of dimensionless variables ξ. $\boldsymbol{U}(\xi)$ is coefficient matrix of differential equation of cylindrical shell, and is an eight-order square matrix. There are 22 non-zero elements in $\boldsymbol{U}(\xi)$, see **Appendix A**.

2.2 Equations of Motion for Conical Shell

In cylindrical coordinate system, generatrix direction and radial direction of conical are defined as coordinate direction. The position of any points on conical shell can be described as (s , θ). s is length from the top point of the conical to any points on conical shell along generatrix direction. θ is angle of the point along circumferential direction in cylindrical coordinate system. The coordinate system of conical shell is seen in Figure 2.

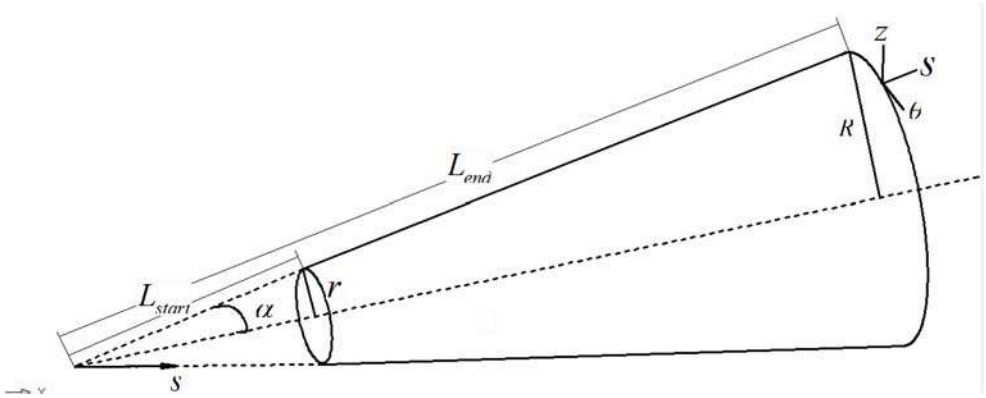

Figure 2: Coordinate system of conical shell.

Force Analysis of conical shell (Trie T. 1982), force balance equations of conical shell are given

$$\frac{1}{s}\frac{\partial(sN_s)}{\partial s} + \frac{1}{s\sin\alpha}\frac{\partial N_{\theta s}}{\partial \theta} + \frac{N_\theta}{s} + \rho h\omega^2 u = 0 \tag{31}$$

$$\frac{1}{s\sin\alpha}\frac{\partial N_\theta}{\partial \theta} + \frac{1}{s}\frac{\partial N_{s\theta}}{\partial s} + \frac{N_{s\theta}}{s} + \frac{Q_\theta}{s\tan\alpha} + \rho h\omega^2 v = 0 \tag{32}$$

$$\frac{N_\theta}{s\tan\alpha} - \frac{1}{s}\frac{\partial(sQ_s)}{\partial s} - \frac{1}{s\sin\alpha}\frac{\partial Q_\theta}{\partial \theta} - \rho h\omega^2 w = 0 \tag{33}$$

Among of them, Kevin-Kirchhoff membrane forces, shear and all internal forces are

$$V_s = Q_s + \frac{1}{s\sin\alpha}\frac{\partial M_{\theta x}}{\partial \theta} \tag{34}$$

$$S_{s\theta} = N_{s\theta} + \frac{M_{\theta x}}{s\tan\alpha} \tag{35}$$

$$N_s = \frac{Eh}{1-\nu^2}\left[\frac{\partial u}{\partial s} + \frac{v}{s}\left(\frac{1}{\sin\alpha}\frac{\partial v}{\partial \theta} + u + \frac{w}{\tan\alpha}\right)\right] \tag{36}$$

$$N_\theta = \frac{Eh}{1-\nu^2}\left[\frac{1}{s}\left(\frac{1}{\sin\alpha}\frac{\partial v}{\partial \theta} + u + \frac{w}{\tan\alpha}\right) + v\frac{\partial u}{\partial s}\right] \tag{37}$$

$$N_{s\theta} = N_{\theta s} = \frac{Eh}{2(1+\nu)}\left[\frac{\partial v}{\partial s} + \frac{1}{s}\left(\frac{1}{\sin\alpha}\frac{\partial u}{\partial \theta} - v\right)\right] \tag{38}$$

$$M_\theta = \frac{Eh^3}{12(1-\nu^2)}\left[\frac{1}{s}\left(-\frac{1}{s\sin^2\alpha}\frac{\partial^2 w}{\partial \theta^2} - v\frac{\partial^2 w}{\partial s^2}\right) - v\frac{\partial^2 w}{\partial s^2}\right] \tag{39}$$

$$M_{s\theta} = M_{\theta s} = \frac{Eh^3}{12(1+\nu)}\frac{1}{s\sin\alpha}\left[\frac{1}{s}\frac{\partial w}{\partial \theta} - \frac{\partial^2 w}{\partial s \partial \theta}\right] \tag{40}$$

$$Q_s = \frac{1}{s}\left(M_s + s\frac{\partial M_s}{\partial s}\right) + \frac{1}{s\sin\alpha}\frac{\partial M_{\theta x}}{\partial \theta} - \frac{M_\theta}{s} \tag{41}$$

$$Q_\phi = \frac{1}{s\sin\alpha}\frac{\partial M_\theta}{\partial \theta} + \frac{1}{s}\left(M_{s\theta} + s\frac{\partial M_{s\theta}}{\partial s}\right) + \frac{M_{\theta s}}{s} \tag{42}$$

The relationship of radial displacement and slope of conical shell satisfies

$$\varphi = \frac{\partial w}{\partial s} \tag{43}$$

All quantities are processed into dimensionless quantities and expanded to trigonometric series along the circumferential direction.

$$(u, w) = h\sum_{\alpha=0}^{1}\sum_{n}(\tilde{u}, \tilde{w})\sin\left(n\theta + \frac{\alpha\pi}{2}\right) \tag{44}$$

$$v = h\sum_{\alpha=0}^{1}\sum_{n}\tilde{v}\cos\left(n\theta + \frac{\alpha\pi}{2}\right) \tag{45}$$

$$\varphi = \frac{h}{R}\sum_{\alpha=0}^{1}\sum_{n}\tilde{\varphi}\sin\left(n\theta + \frac{\alpha\pi}{2}\right) \tag{46}$$

$$(M_s, M_\theta) = \frac{K}{R}\sum_{\alpha=0}^{1}\sum_{n}(\tilde{M}_s, \tilde{M}_\theta)\sin\left(n\theta + \frac{\alpha\pi}{2}\right) \tag{47}$$

$$(M_{s\theta}, M_{\theta s}) = \frac{K}{R}\sum_{\alpha=0}^{1}\sum_{n}(\tilde{M}_{s\theta}, \tilde{M}_{\theta s})\cos\left(n\theta + \frac{\alpha\pi}{2}\right) \tag{48}$$

$$(N_{s\theta}, N_{\theta s}, Q_\theta, S_{s\theta}) = \frac{K}{R^2}\sum_{\alpha=0}^{1}\sum_{n}(\tilde{N}_{s\theta}, \tilde{N}_{\theta s}, \tilde{Q}_\theta, \tilde{S}_{s\theta})\cos\left(n\theta + \frac{\alpha\pi}{2}\right) \tag{49}$$

$$(N_s, N_\theta, Q_s, V_s) = \frac{K}{R^2}\sum_{\alpha=0}^{1}\sum_{n}(\tilde{N}_s, \tilde{N}_\theta, \tilde{Q}_s, \tilde{V}_s)\sin\left(n\theta + \frac{\alpha\pi}{2}\right) \tag{50}$$

Where bending rigidity is $K = \frac{Eh^3}{12(1-\nu^2)}$, Young's modulus and Poisson's ratio is E and ν. n is circumferential modal number. α=1 and α=0 are respectively symmetric or antisymmetric modal. R is radius at the larger end of the conical. h is thickness of the conical. Other dimensionless quantities are presented as

$$\xi = \frac{s}{R} \tag{51}$$

$$\xi_1 = \frac{L_{start}}{R} \tag{52}$$

$$\xi_2 = \frac{L_{end}}{R} \tag{53}$$

$$\tilde{h} = \frac{h}{R} \tag{54}$$

$$\lambda^2 = \frac{\rho h R^2 \omega^2}{D} \tag{55}$$

$_s$, L_{start}, L_{end} are described as Figure 2. ρ, ω, λ are respectively material density, circular frequency and dimensionless frequency parameter. There are sixteen unknown quantities in above equations. To eliminate eight unknown quantities M_θ, $M_{s\theta}$, $M_{\theta s}$, $N_{s\theta}$, $N_{\theta s}$, Q_θ, N_θ, Q_s eight unknown quantities $_u$, $_v$, $_w$, φ, M_s, V_s, N_s, $S_{s\theta}$ are retained, which is sectional state vector elements of conical shell. Then, first-order matrix differential equation of conical shell is obtained.

$$\frac{d\{\mathbf{Z}(\xi)\}}{d\xi} = \mathbf{U}(\xi)\{\mathbf{Z}(\xi)\} + \{\boldsymbol{F}(\xi)\} - \{\boldsymbol{p}(\xi)\} \tag{56}$$

Where $\{\mathbf{Z}(\xi)\} = \left\{\tilde{u}, \tilde{v}, \tilde{w}, \tilde{\varphi}, \tilde{M}_s, \tilde{V}_s, \tilde{N}_s, \tilde{S}_{s\theta}\right\}^T$ is state vector of conical shell. $\mathbf{U}(\xi)$ is variable coefficient matrix, $\{\boldsymbol{F}(\xi)\} - \{\boldsymbol{p}(\xi)\}$ is exciting loads. Non-zero elements in $\mathbf{U}(\xi)$ are shown in **Appendix B**.

3 SOLUTIONS TO EQUATIONS OF MOTION

Assuming that the exciting loads are zero in Eqs (30) and (56), the equations of motion are simplified to

$$\frac{d\{\mathbf{Z}_{cy}(\xi)\}}{d\xi} = \mathbf{U}_{cy}(\xi)\{\mathbf{Z}_{cy}(\xi)\} \tag{57}$$

$$\frac{d\{\mathbf{Z}_{co}(\xi)\}}{d\xi} = \mathbf{U}_{co}(\xi)\{\mathbf{Z}_{co}(\xi)\} \tag{58}$$

Obviously, Eqs (57) and (58) are respectively the equations of motion for cylindrical and conical shell, which are dealt with as following

$$\frac{d\{\mathbf{Z}(\xi)\}}{d\xi} = \mathbf{U}(\xi)\{\mathbf{Z}(\xi)\} \tag{59}$$

$$\int_{\xi_1}^{\xi} \frac{d\{\mathbf{Z}(\xi)\}}{\{\mathbf{Z}(\xi)\}} = \int_{\xi_1}^{\xi} \mathbf{U}(\tau)d\tau \tag{60}$$

$$\ln \mathbf{Z}(\xi)\Big|_{\xi_1}^{\xi} = \int_{\xi_1}^{\xi} \mathbf{U}(\tau)d\tau \tag{61}$$

$$\ln\left(\frac{\mathbf{Z}(\xi)}{\mathbf{Z}(\xi_1)}\right) = \int_{\xi_1}^{\xi} \mathbf{U}(\tau)d\tau \tag{62}$$

$$\mathbf{Z}(\xi) = \exp\left(\int_{\xi_1}^{\xi} \mathbf{U}(\tau)d\tau\right)\mathbf{Z}(\xi_1) \tag{63}$$

In the following chapters, the solution of the coefficient matrix $\exp\left(\int_{\xi_1}^{\xi} \mathbf{U}(\tau)d\tau\right)$ solved by precise integration method is presented.

3.1 Relationship of State Vector for Cylindrical Shell

In the numerical calculation, cylindrical shell is divided into series of segment. Nodes coordinate of segment is ξ_k, (k=0, 1, 2...). Any coordinate of contiguous nodes is ξ_k and ξ_{k+1}, where $\xi_{k+1}=\xi_k+\Delta\xi$. Coefficient matrix $\mathbf{U}(\xi)$ for cylindrical shell is independent of ξ. Thus, coefficient matrix in Eq.(63) can be written as

$$e^{\boldsymbol{U}\Delta\xi}=\exp(\int_{\xi_k}^{\xi_{k+1}}\mathbf{U}(\tau)d\tau) \tag{64}$$

Assuming

$$\boldsymbol{\Phi}_0(\Delta\xi)=e^{\boldsymbol{U}\Delta\xi}=\exp\left(\boldsymbol{H}\right)^{2^s} \tag{65}$$

Where $\boldsymbol{H}=\boldsymbol{U}\dfrac{\Delta\xi}{2^s}$, s is recommended to take 20. $\exp(\boldsymbol{H})$ can be expressed in terms of Taylor series by

$$\exp\left(\boldsymbol{H}\right)=\boldsymbol{I}_8+\sum_{k=1}^{\infty}\frac{\boldsymbol{H}^k}{k!}=\boldsymbol{I}_8+\boldsymbol{T}_a \tag{66}$$

Where $\boldsymbol{I}_8$ is eight-order unit matrix. To take into account that $\boldsymbol{T}_a$ is a small amount relative to the $\boldsymbol{I}_8$, if using addition theorem directly to add $\boldsymbol{I}_8$ and $\boldsymbol{T}_a$, mantissa will appear error because of computer rounding errors, then, lead to loss of precision. Therefore, the paper use addition theorem to calculate $\boldsymbol{T}_a$.

$$\boldsymbol{\Phi}_0(\Delta\xi)=\left[\left(\boldsymbol{I}_8+\boldsymbol{T}_a\right)\left(\boldsymbol{I}_8+\boldsymbol{T}_a\right)\right]^{2^{s-1}}=\left[\boldsymbol{I}_8+2\boldsymbol{T}_a+\boldsymbol{T}_a^2\right]^{2^{s-1}} \tag{67}$$

By assuming $\boldsymbol{T}_a$ as

$$\boldsymbol{T}_a=2\boldsymbol{T}_a+\boldsymbol{T}_a^2 \tag{68}$$

After the s times circulating assignment of Eq. (68), Eq. (67) can be written as

$$\boldsymbol{\Phi}_0(\Delta\xi)=e^{\boldsymbol{U}\Delta\xi}=\boldsymbol{I}_8+\boldsymbol{T}_a \tag{69}$$

Assuming segment coefficient matrix $\boldsymbol{T}_{k+1}=e^{\boldsymbol{U}\Delta\xi}$, the relationship of the state vector of each node can be described as

$$\mathbf{Z}(\xi_1)=\boldsymbol{T}_1\mathbf{Z}(\xi_0) \tag{70}$$

$$\mathbf{Z}(\xi_2)=\boldsymbol{T}_2\mathbf{Z}(\xi_1) \tag{71}$$

$$\vdots$$

$$\mathbf{Z}(\xi_{k+1})=\boldsymbol{T}_{k+1}\mathbf{Z}(\xi_k) \tag{72}$$

$$\vdots$$

$$\mathbf{Z}(\xi_n)=\boldsymbol{T}_n\mathbf{Z}(\xi_{n-1}) \tag{73}$$

3.2 Relationship of State Vector for Conical Shell

To facilitate the numerical calculation, conical shells are dispersed into series segments along generatrix direction. Eq. (63) can be written as

$$\mathbf{Z}(\xi_1)=\exp\left[\int_{\xi_0}^{\xi_1}\boldsymbol{U}(\tau)d\tau\right]\mathbf{Z}(\xi_0) \tag{74}$$

$$\mathbf{Z}(\xi_2)=\exp\left[\int_{\xi_1}^{\xi_2}\boldsymbol{U}(\tau)d\tau\right]\mathbf{Z}(\xi_1) \tag{75}$$

$$\vdots \tag{76}$$

$$\begin{aligned}\boldsymbol{Z}(\xi_{j+1}) &= \exp\left[\int_{\xi_j}^{\xi_{j+1}} \boldsymbol{U}(\tau)d\tau\right]\boldsymbol{Z}(\xi_j)\\ &\vdots\\ \boldsymbol{Z}(\xi_n) &= \exp\left[\int_{\xi_{n-1}}^{\xi_n} \boldsymbol{U}(\tau)d\tau\right]\boldsymbol{Z}(\xi_{n-1})\end{aligned} \tag{77}$$

Assuming

$$\boldsymbol{T}_{j+1} = \exp\left[\int_{\xi_j}^{\xi_{j+1}} \boldsymbol{U}(\tau)d\tau\right] \tag{78}$$

Eqs. (75)-(78) can be described as

$$\boldsymbol{Z}(\xi_1) = \boldsymbol{T}_1\boldsymbol{Z}(\xi_0) \tag{79}$$

$$\boldsymbol{Z}(\xi_2) = \boldsymbol{T}_2\boldsymbol{Z}(\xi_1) \tag{80}$$

$$\vdots$$

$$\boldsymbol{Z}(\xi_{j+1}) = \boldsymbol{T}_{j+1}\boldsymbol{Z}(\xi_j) \tag{81}$$

$$\vdots$$

$$\boldsymbol{Z}(\xi_n) = \boldsymbol{T}_n\boldsymbol{Z}(\xi_{n-1}) \tag{82}$$

Coefficient matrix $\mathbf{U}(\xi)$ for conical shell is dependent of ξ. Therefore, transfer matrix $\exp\left[\int_{\xi_j}^{\xi_{j+1}} \boldsymbol{U}(\tau)d\tau\right]$ can't be calculated like transfer matrix for cylindrical shell. The paper calculates transfer matrix $\boldsymbol{T}_{j+1}$ for conical shell by precise integration. Segments $\Delta\xi$ of conical shell are divided into precise integral step $\Delta\varsigma$ ($\Delta\varsigma = \frac{\Delta\xi}{s}$). s is recommended to take 5. For the segment $\xi_j \sim \xi_{j+1}$ of conical shell, integral step node is $\varsigma_k = \xi_j + k\left(\xi_{j+1} - \xi_j\right)/s = \xi_j + k\Delta\varsigma$, $k = 0,1,..,s$. In a precise integral step, assuming $\tau = \left(\varsigma_{k-1} + \varsigma_k\right)/2$, $\boldsymbol{U}(\tau)$ can be recognized to be constant coefficient matrix, which is independent of ς. Variable coefficient matrix $\boldsymbol{T}_{j+1}$ in segment $\Delta\xi$ of conical can be calculated through constant coefficient matrix of integral steps tired multiplying

$$\boldsymbol{T}_{j+1} = \prod_{k=1}^{s} \exp\left[\boldsymbol{U}(\tau_k)(\varsigma_k - \varsigma_{k-1})\right] = \prod_{k=1}^{s} \exp\left[\boldsymbol{U}(\tau_k)\Delta\varsigma\right] = \prod_{k=1}^{s} \boldsymbol{T}_{j+1}^{k+1} \tag{83}$$

Constant coefficient matrix $\boldsymbol{T}_{j+1}^{k+1} = \exp\left[\boldsymbol{U}(\tau_k)\Delta\varsigma\right]$ of precise integral step can be solved like reference method for solving $e^{\boldsymbol{U}\Delta\xi}$ in character 3.1.

3.3 Solutions for Coefficient Matrix of the Conical Shell

Illustration for the conical shell is seen in Figure 3, α is semi-vertex conical angle. R is larger end radius of conical shell. L_s is length from the top point of the conical to the smaller endof conical shell along generatrix direction. L_e is length from the top point of the conical to the larger end of conical shell along generatrix direction. The length of conical is $L_{co} = L_e - L_s$, The thickness of the conical shell is h.

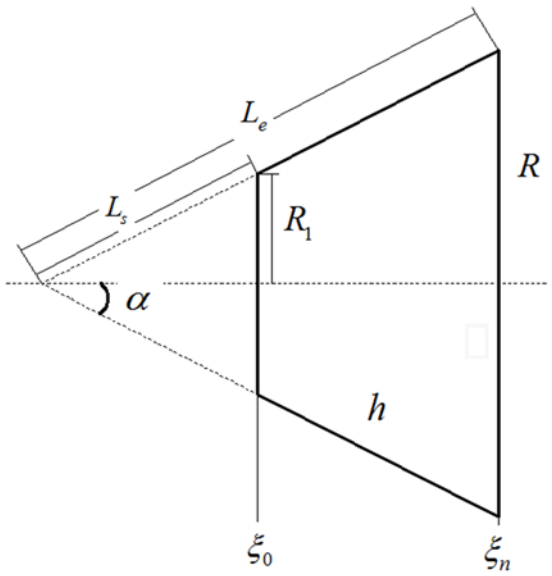

Figure 3: Illustration for the conical shell.

According to character 3.2, the state vectors of segment nodes from the conical shell satisfy

$$\boldsymbol{Z}(\xi_1)=\boldsymbol{T}_1\boldsymbol{Z}(\xi_0) \tag{84}$$

$$\boldsymbol{Z}(\xi_2)=\boldsymbol{T}_2\boldsymbol{Z}(\xi_1) \tag{85}$$

$$\vdots$$

$$\boldsymbol{Z}(\xi_{j+1})=\boldsymbol{T}_{j+1}\boldsymbol{Z}(\xi_j) \tag{86}$$

$$\vdots$$

$$\boldsymbol{Z}(\xi_n)=\boldsymbol{T}_n\boldsymbol{Z}(\xi_{n-1}) \tag{87}$$

Eqs. (84)-(89) can be written in term of matrix as follows

$$\begin{bmatrix} -\boldsymbol{T}_1 & \boldsymbol{I} & 0 & 0 & 0 & 0 & 0 & 0 \\ 0 & -\boldsymbol{T}_2 & \boldsymbol{I} & 0 & 0 & 0 & 0 & 0 \\ 0 & 0 & -\boldsymbol{T}_3 & \boldsymbol{I} & 0 & 0 & 0 & 0 \\ 0 & 0 & 0 & \ldots & 0 & 0 & 0 & 0 \\ 0 & 0 & 0 & 0 & -\boldsymbol{T}_{i+1}\mathbf{P} & \boldsymbol{I} & 0 & 0 \\ 0 & 0 & 0 & 0 & 0 & \ldots & 0 & 0 \\ 0 & 0 & 0 & 0 & 0 & 0 & -\boldsymbol{T}_n & \boldsymbol{I} \end{bmatrix}_{(8n,8n+8)} \begin{Bmatrix} \boldsymbol{Z}(\xi_0) \\ \boldsymbol{Z}(\xi_1) \\ \boldsymbol{Z}(\xi_2) \\ \vdots \\ \boldsymbol{Z}(\xi_i) \\ \vdots \\ \boldsymbol{Z}(\xi_n) \end{Bmatrix}_{(8n+8,1)} = \begin{Bmatrix} 0 \\ 0 \\ 0 \\ \vdots \\ 0 \\ \vdots \\ 0 \end{Bmatrix} \tag{88}$$

All kinds of boundary conditions at ends of the conical shell are given by (Note: F is free end. S is simply supported end. C is clamped end.)

Boundary condition F-F: $\overline{M_x}=\overline{V_x}=\overline{S_{x\varphi}}=\overline{N_x}=0$

$$\boldsymbol{Z}(\xi_0)=\left\{\bar{u}^0 \quad \bar{v}^0 \quad \bar{w}^0 \quad \bar{\psi}^0 \quad 0 \quad 0 \quad 0 \quad 0\right\}^{\mathrm{T}} \tag{89}$$

$$\boldsymbol{Z}(\xi_n)=\left\{\bar{u}^n \quad \bar{v}^n \quad \bar{w}^n \quad \bar{\psi}^n \quad 0 \quad 0 \quad 0 \quad 0\right\}^{\mathrm{T}} \tag{90}$$

Boundary condition S-S: $\bar{v}=\bar{w}=\overline{M_x}=\overline{N_x}=0$

$$\boldsymbol{Z}(\xi_0)=\left\{\bar{u}^0 \quad 0 \quad 0 \quad \bar{\psi}^0 \quad 0 \quad \overline{V_x}^0 \quad \overline{S_{x\varphi}}^0 \quad 0\right\}^{\mathrm{T}} \tag{91}$$

$$\boldsymbol{Z}(\xi_n)=\left\{\bar{u}^n \quad 0 \quad 0 \quad \bar{\psi}^n \quad 0 \quad \overline{V_x}^n \quad \overline{S_{x\varphi}}^n \quad 0\right\}^{\mathrm{T}} \tag{92}$$

Boundary condition C-C: $\overline{u} = \overline{v} = \overline{w} = \overline{\psi} = 0$

$$\boldsymbol{Z}(\xi_0) = \left\{0 \quad 0 \quad 0 \quad 0 \quad \overline{M_x^{\,0}} \quad \overline{V_x^{\,0}} \quad \overline{S_{x\varphi}^{\,0}} \quad \overline{N_x^{\,0}}\right\}^{\mathrm{T}} \tag{93}$$

$$\boldsymbol{Z}(\xi_{\mathrm{n}}) = \left\{0 \quad 0 \quad 0 \quad 0 \quad \overline{M_x^{\,n}} \quad \overline{V_x^{\,n}} \quad \overline{S_{x\varphi}^{\,n}} \quad \overline{N_x^{\,n}}\right\}^{\mathrm{T}} \tag{94}$$

Boundary condition F-S:

$$\boldsymbol{Z}(\xi_0) = \left\{\overline{u}^0 \quad \overline{v}^0 \quad \overline{w}^0 \quad \overline{\psi}^0 \quad 0 \quad 0 \quad 0 \quad 0\right\}^{\mathrm{T}} \tag{95}$$

$$\boldsymbol{Z}(\xi_{\mathrm{n}}) = \left\{\overline{u}^n \quad 0 \quad 0 \quad \overline{\psi}^n \quad 0 \quad \overline{V_x^{\,n}} \quad \overline{S_{x\varphi}^{\,n}} \quad 0\right\}^{\mathrm{T}} \tag{96}$$

Boundary condition F-C:

$$\boldsymbol{Z}(\xi_0) = \left\{\overline{u}^0 \quad \overline{v}^0 \quad \overline{w}^0 \quad \overline{\psi}^0 \quad 0 \quad 0 \quad 0 \quad 0\right\}^{\mathrm{T}} \tag{97}$$

$$\boldsymbol{Z}(\xi_{\mathrm{n}}) = \left\{0 \quad 0 \quad 0 \quad 0 \quad \overline{M_x^{\,n}} \quad \overline{V_x^{\,n}} \quad \overline{S_{x\varphi}^{\,n}} \quad \overline{N_x^{\,n}}\right\}^{\mathrm{T}} \tag{98}$$

Boundary condition S-F

$$\boldsymbol{Z}(\xi_0) = \left\{\overline{u}^0 \quad 0 \quad 0 \quad \overline{\psi}^0 \quad 0 \quad \overline{V_x^{\,0}} \quad \overline{S_{x\varphi}^{\,0}} \quad 0\right\}^{\mathrm{T}} \tag{99}$$

$$\boldsymbol{Z}(\xi_{\mathrm{n}}) = \left\{\overline{u}^n \quad \overline{v}^n \quad \overline{w}^n \quad \overline{\psi}^n \quad 0 \quad 0 \quad 0 \quad 0\right\}^{\mathrm{T}} \tag{100}$$

Boundary condition S-C

$$\boldsymbol{Z}(\xi_0) = \left\{\overline{u}^0 \quad 0 \quad 0 \quad \overline{\psi}^0 \quad 0 \quad \overline{V_x^{\,0}} \quad \overline{S_{x\varphi}^{\,0}} \quad 0\right\}^{\mathrm{T}} \tag{101}$$

$$\boldsymbol{Z}(\xi_{\mathrm{n}}) = \left\{0 \quad 0 \quad 0 \quad 0 \quad \overline{M_x^{\,n}} \quad \overline{V_x^{\,n}} \quad \overline{S_{x\varphi}^{\,n}} \quad \overline{N_x^{\,n}}\right\}^{\mathrm{T}} \tag{102}$$

Boundary condition C-F

$$\boldsymbol{Z}(\xi_0) = \left\{0 \quad 0 \quad 0 \quad 0 \quad \overline{M_x^{\,0}} \quad \overline{V_x^{\,0}} \quad \overline{S_{x\varphi}^{\,0}} \quad \overline{N_x^{\,0}}\right\}^{\mathrm{T}} \tag{103}$$

$$\boldsymbol{Z}(\xi_{\mathrm{n}}) = \left\{\overline{u}^n \quad \overline{v}^n \quad \overline{w}^n \quad \overline{\psi}^n \quad 0 \quad 0 \quad 0 \quad 0\right\}^{\mathrm{T}} \tag{104}$$

Boundary condition C-F

$$\boldsymbol{Z}(\xi_0) = \left\{0 \quad 0 \quad 0 \quad 0 \quad \overline{M_x^{\,0}} \quad \overline{V_x^{\,0}} \quad \overline{S_{x\varphi}^{\,0}} \quad \overline{N_x^{\,0}}\right\}^{\mathrm{T}} \tag{105}$$

$$\boldsymbol{Z}(\xi_{\mathrm{n}}) = \left\{\overline{u}^n \quad 0 \quad 0 \quad \overline{\psi}^n \quad 0 \quad \overline{V_x^{\,n}} \quad \overline{S_{x\varphi}^{\,n}} \quad 0\right\}^{\mathrm{T}} \tag{106}$$

According to the given boundary condition at ends of the conical shell, rows number where elements of state vector are zero is found. Then, to delete corresponding columns of coefficient matrix, Eq. (88) can be written as

$$\begin{bmatrix} -\widehat{\boldsymbol{T}}_1 & \boldsymbol{I} & 0 & 0 & 0 & 0 & 0 & 0 \\ 0 & -\boldsymbol{T}_2 & \boldsymbol{I} & 0 & 0 & 0 & 0 & 0 \\ 0 & 0 & -\boldsymbol{T}_3 & \boldsymbol{I} & 0 & 0 & 0 & 0 \\ 0 & 0 & 0 & \cdots & 0 & 0 & 0 & 0 \\ 0 & 0 & 0 & 0 & -\boldsymbol{T}_{i+1}\mathbf{P} & \boldsymbol{I} & 0 & 0 \\ 0 & 0 & 0 & 0 & 0 & \cdots & 0 & 0 \\ 0 & 0 & 0 & 0 & 0 & 0 & -\boldsymbol{T}_n & \widehat{\boldsymbol{I}} \end{bmatrix}_{(8n,8n)} \begin{Bmatrix} \widehat{\boldsymbol{Z}}(\xi_0) \\ \boldsymbol{Z}(\xi_1) \\ \boldsymbol{Z}(\xi_2) \\ \vdots \\ \boldsymbol{Z}(\xi_i) \\ \vdots \\ \widehat{\boldsymbol{Z}}(\xi_{\mathrm{n}}) \end{Bmatrix}_{(8n,1)} = \begin{Bmatrix} 0 \\ 0 \\ 0 \\ \vdots \\ 0 \\ \vdots \\ 0 \end{Bmatrix}_{(8n,1)} \tag{107}$$

Since the state vector can't all be zero vectors, determinant of coefficient matrix must be zero. The follow equation is obtained.

$$\begin{vmatrix} -\widehat{\boldsymbol{T}}_1 & \boldsymbol{I} & 0 & 0 & 0 & 0 & 0 & 0 \\ 0 & -\boldsymbol{T}_2 & \boldsymbol{I} & 0 & 0 & 0 & 0 & 0 \\ 0 & 0 & -\boldsymbol{T}_3 & \boldsymbol{I} & 0 & 0 & 0 & 0 \\ 0 & 0 & 0 & \ldots & 0 & 0 & 0 & 0 \\ 0 & 0 & 0 & 0 & -\boldsymbol{T}_{i+1}\mathbf{P} & \boldsymbol{I} & 0 & 0 \\ 0 & 0 & 0 & 0 & 0 & \ldots & 0 & 0 \\ 0 & 0 & 0 & 0 & 0 & 0 & -\boldsymbol{T}_n & \widehat{\boldsymbol{I}} \end{vmatrix}_{(8n,8n)} = 0 \tag{108}$$

Natural frequency of the conical shell is the only unknown quantity in the matrix. Natural frequency is obtained through solving frequency characteristic Eq.(108). Substitution of natural frequency into Eq.(107), Proportional relationship of state vectors can be obtained. Then, modes of conical shell will be acquired in the given boundary condition.

4 CONFIRMATION OF PITMM AND NUMERICAL ANALYSIS

4.1 Confirmation of PITMM

4.1.1 Results Contrast of PITMM and Previous Literature

To verify the validity of the PITMM that is used to research on free vibrational characteristics of the conical shells, the results from PITMM are compared with the results from reference [13].

Geometry parameter of the conical shells is: $L=20m$, $h=0.2m$, $R=20m$, $\alpha=30^0$ .Where $L$is the length of conical shell. R_1 is radius of the smaller end of conical shell. R is larger end radius of conical shell. α is the semi-vertex angle. $\lambda=R\omega(\rho h/D)^{\frac{1}{2}}$ is dimensionless frequency parameter. The material parameter are Poisson's ratio $\upsilon=0.3$, Young's modulus $E=2.11\times10^{11}N/m^2$, Density $\rho=7800kg/m^3$. The boundary condition of the conical shells are respectively simply -simply, clamped-clamped, free- free.

Axial modal number m=1, circumferential modal number n=1:10, natural frequency of the conical shells are presented in Table.1-3. the values of natural frequency from PITMM agree well with the references [13].

4.1.2 Results Contrast of PITMM and FEM

Contrast of the results from PITMM and FEM, the validity of PITMM advanced by the paper is further verified, which is examined in Figure 4. It can be observed from Figure 4 that the results from PITMM match almost perfectly with the results from FEM. The results of PITMM and FEM only appear slight difference at n=1, n=10. Therefore, PITMM given by the paper can accurately calculate natural frequencies for the conical shells. Furthermore, PITMM is absolutely unlimited to the boundary conditions at ends of the conical shells.

Modal number		Natural frequency ω (HZ)		
m	n	Reference [13]	PITMM	Relative deviation
1	1	29.9129	29.3296	-1.95%
	2	26.8326	26.7380	-0.35%
	3	18.0585	17.8254	-1.29%
	4	12.7885	12.7324	-0.44%
	5	11.0225	11.1634	1.28%
	6	11.2995	11.3225	0.20%
	7	12.8908	12.4141	-3.69%
	8	15.3580	15.4831	0.81%
	9	18.2627	18.0296	-1.28%
	10	21.4599	21.8944	2.02%

Table 1: Frequency for the conical shells in simply-simply boundary condition.

Modal number		Natural frequency ω (HZ)		
m	n	Reference [13]	PITMM	Relative deviation
1	1	37.9421	37.8789	-0.16%
	2	28.2925	27.6930	-2.11%
	3	21.5622	21.6901	0.59%
	4	17.4600	17.3930	-0.38%
	5	15.1097	15.0056	-0.69%
	6	14.5112	14.5282	0.12%

7	15.2266	15.3239	0.64%
8	17.2558	17.2338	-0.13%
9	20.0146	20.6211	3.03%
10	23.3577	23.4859	0.55%

Table 2: Frequency for the conical shells in clamped-clamped boundary condition.

Modal number		Natural frequency ω (HZ)		
m	n	Reference [13]	PITMM	Relative deviation
1	1	37.6501	37.4014	-0.66%
	2	0.4311	0.4375	1.48%
	3	1.4162	1.4732	4.09%
	4	2.5699	2.5873	0.68%
	5	4.0152	4.0197	0.11%
	6	5.7521	5.7113	-0.71%
	7	7.4893	7.3211	-2.24%
	8	9.6646	9.6310	-0.35%
	9	11.9858	11.6183	-3.06%
	10	14.5985	14.1648	-2.97%

Table 3: Frequency for the conical shells in free-free boundary condition.

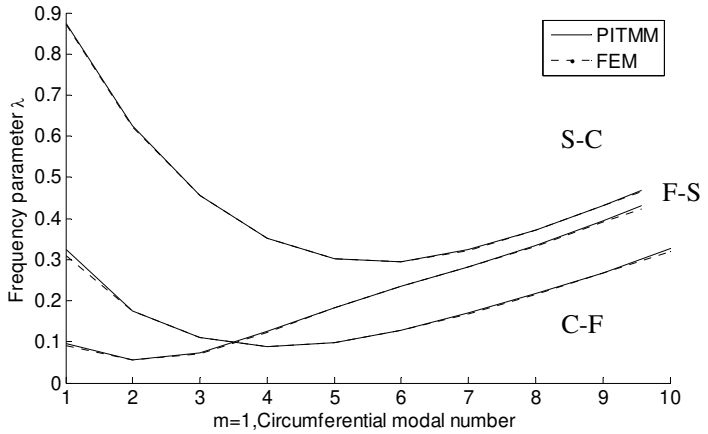

Figure 4: m=1,n=1:10 contrast of frequency parameter λ from PITMM and FEM in different boundary conditions.

4.2 Numerical Analysis

4.2.1 Effect of Boundary Conditions on the Free Vibrational Characteristic

The influences of boundary conditions on free vibrational characteristics of the conical shell are shown in Figure 5. In five different boundary conditions of the clamped-clamped, simply-simply, free-free, clamped-free, free-clamped, corresponding to axial modal number m=1, the values of natural frequency varying with circumferential modal number n are plotted. It can be seen that the natural frequency curve is relatively flat and initially decreases, then increase after n=4 in clamped-clamped, simply-simply, free-free, clamped-free boundary condition. In clamped-free boundary conditions, the natural frequency curve intensely vary with n and reach the minimum value at n=2. After n=2, the curve rise. In simply-simply, free-free, clamped-free, free-clamped boundary conditions, almost all the values of natural frequency less than the values in clamped-clamped boundary condition.

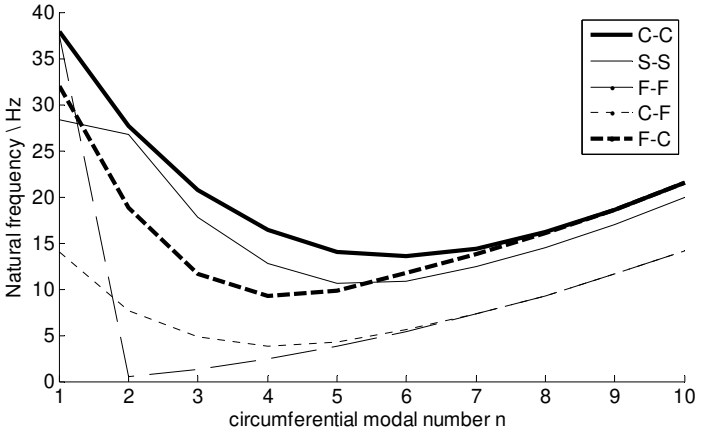

Figure 5: m=1,n=1:10 effects of the boundary condition on natural frequency.

4.2.2 Effect of Shell Thickness on the Free Vibrational Characteristic

Figure 6 presents the influence of the shell thickness h of the conical shell on the frequency parameter in clamped-clamped boundary condition. With the increasing of the shell thickness, the frequency parameter slowly increase corresponding to circumferential modal number n=0, however, the frequency parameter rapidly increase corresponding to n=5. In the all, the frequency parameter of the conical shell increase with the increasing of the shell thickness.

4.2.3 Effect of Semi-Vertex Angle on the Free Vibrational Characteristic

When the influence of semi-vertex conical angle on the frequency parameter is investigated, the structural parameter for the conical shells are: $R=0.2m$, $h=0.002m$, $L_{co}=0.2m$, $\alpha=0^0-90^0$. The material parameter are Poisson's ratio υ=0.3, Young's modulus $E=2.11\times10^{11}N/m^2$,Density $\rho=7800kg/m^3$. Figures 7-9 present the effect of the semi-vertex conical angle on the frequency parameter for the conical shells in simply-simply, clamped-simply, clamped-clamped boundary conditions. The conical shell is recognized as cylindrical shell and circular plate at the extreme semi-vertex conical angle $\alpha=0^0$ and $\alpha=90^0$. The values of frequency parameter for the conical shells are corresponded to axial modal number m=1. In Figure 7-9 of simply-simply, clamped-simply and clamped-clamped boundary conditions, n=1, frequency parameter initially slowly increase and then rapidly decrease after $\alpha=20^0$. Frequency parameters reach the maximum value at $\alpha=20^0$. Corresponding to n=2:5, The curves of frequency parameter gradually drop in simply-simply, clamped-simply and clamped-clamped boundary conditions Overall, in the three different boundary conditions, when $\alpha=80^0$, the values of frequency parameter respectively tend towards fixed values corresponding to n=1:5.

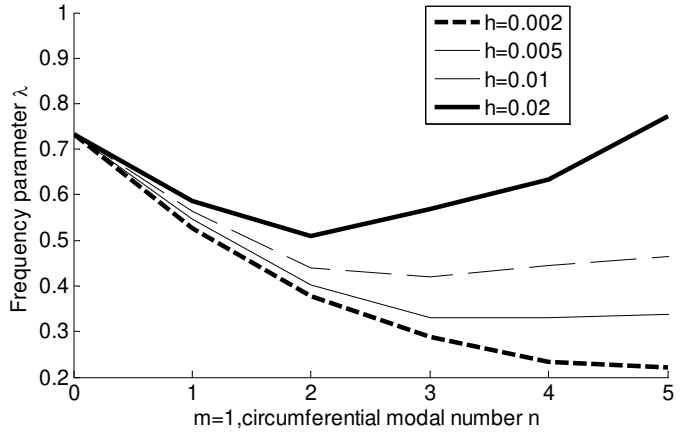

Figure 6: m=1,n=0:5 effects of shell thickness on frequency parameter λ in C-C boundary condition.

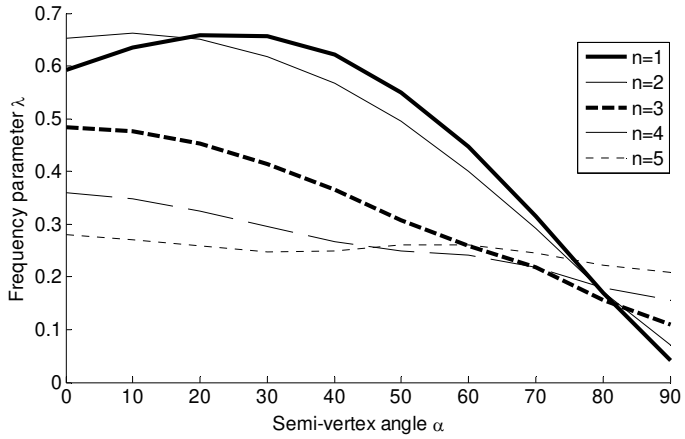

Figure 7: m=1,n=1:5 frequency parameter λ varying with semi-vertex angle in S-S boundary condition.

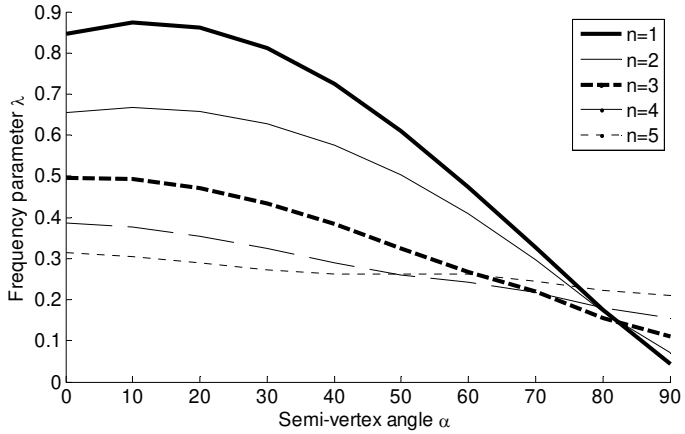

Figure 8: m=1,n=1:5 frequency parameter λ varying with semi-vertex angle in C-S boundary condition.

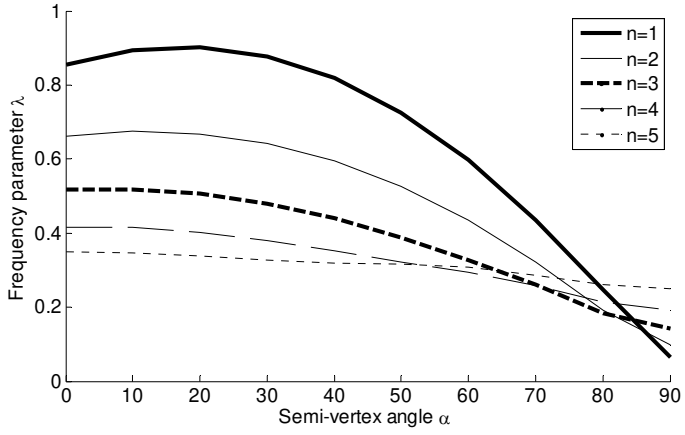

Figure 9: m=1,n=1:5 frequency parameter λ varying with semi-vertex angle in C-C boundary condition.

5 CONCLUSIONS

A new method that is PITMM is advanced in the paper to research the free vibrational characteristics of the conical shells. Based on traditional transfer matrix and precise integration methods, PITMM is constructed. The method not only retains the traditional transfer matrix methods' advantages of formula regularity and easily programming, but also obtains the high accuracy from the precise integration methods. The accuracy of results solved by PITMM rises, which can be observed from the results contrast of previous paper, FEM, and PITMM. Based on PITMM, the effects of

boundary conditions, the shell thickness and semi-vertex conical angle on free vibrational characteristics of the conical shells are examined.

Based on the characteristics of PITMM, the method can also be extended to solve the free vibrational problem about variable thickness cylindrical shell, reinforced cone shells and other rotating body structure.

Acknowledgments

The paper is supported by National Natural Science Foundation China (No.51209052), Heilongjiang Province Natural Science Foundation (QC2011C013), Harbin Science and Technology Development Innovation Foundation of youth (2011RFQXG021), Fundamental Research Funds for the Central Universities(HEUCF40117), High Technology Ship Funds of Ministry of Industry and Information Technology of P. R. China, Opening Funds of State Key Laboratory of Ocean Engineering of Shanghai Jiao tong University(No.1307）, funded by China Postdoctoral Science Foundation (NO.2014M552661).

References

[1] Kana DD, Craig RR. (1968). Parametric oscillations of longitudinally excited cylindrical shell containing liquid. Spacecraft Rockets 5(1): 13-21.

[2] Bolotin VV. (1964). The Dynamic stability of elastic systems. San Francisco: Holden-day Press

[3] Koutunvov VB. (1993). Dynamic stability and nonlinear parametric vibration of cylindrical shells. Comput Struct 46(1): 149-56.

[4] Rayleigh J. (1945). The theory of Sound. New York: Dover Publication.

[5] Leissa A. W. (1973). Vibration of Shells, NASA SP-288. Washington: U.S. Government Printing Office.

[6] Grenwelge Jr. O. E, Muster D. (1969). Free vibrations of ring-and-stringer-stiffened conical shells. Journal of the Acoustical Society of America 46 (1, 2): 176-185.

[7] Talebitooti M, Ghayour M, Ziaei-Rad S, et al.(2010). Free vibrations of rotating composite conical shells with stringer and ring stiffeners. Archive of Applied Mechanics 8: 1-15.

[8] Li F. M, Kishimoto K, Huang W. H. (2009). The calculations of natural frequencies and forced vibration responses of conical shell using the rayleigh-ritz method. Mechanics Research Communications 36 (5): 595-602.

[9] Liew K. M, Ng T. Y, Zhao X. (2005). Free vibration analysis of conical shells via the element-free kp-ritz method. Journal of Sound and Vibration 281(3-5): 627-645.

[10] Guo Y. P. (1994). Normal mode propagation on conical shells. Journal of the Acoustical Society of America 96(1): 256-264.

[11] W.Flugge. (1973). Stresses in Shells. Berlin: Siegfried Publication.

[12] Trie T, Yamada G, Kaneko Y. (1982). Free vibration of a conical shell with variable thickness. Journal of Sound and Vibration 82(1): 83-94.

[13] Cong Zhang, Meixia Cheng. (2011). Free vibration of a conical shell in arbitrarily boundary condition. The 13th Academic Conference on Marine Underwater Noise (China).

APPENDIX A. COEFFICIENT MATRIX $U(\xi)$ OF CYLINDRICAL SHELL

$$\boldsymbol{U}_{12} = \boldsymbol{U}_{75} = -\boldsymbol{U}_{78} = -\mu n \tag{A.1}$$

$$\boldsymbol{U}_{13} = \boldsymbol{U}_{68} = -\mu \tag{A.2}$$

$$U_{18} = \frac{\tilde{h}}{12} \tag{A.3}$$

$$\boldsymbol{U}_{21} = -\boldsymbol{U}_{87} = n \tag{A.4}$$

$$\boldsymbol{U}_{24} = -\frac{n\tilde{h}^2}{6} \tag{A.5}$$

$$\boldsymbol{U}_{27} = \frac{\tilde{h}}{6(1-\mu)} \tag{A.6}$$

$$\boldsymbol{U}_{34} = \boldsymbol{U}_{56} = 1 \tag{A.7}$$

$$\boldsymbol{U}_{43} = \boldsymbol{U}_{65} = \mu n^2 \tag{A.8}$$

$$\boldsymbol{U}_{45} = \frac{1}{\tilde{h}} \tag{A.9}$$

$$\boldsymbol{U}_{54} = 2(1-\mu)n^2\tilde{h} \tag{A.10}$$

$$\boldsymbol{U}_{62} = -\frac{12(1-\mu^2)n}{\tilde{h}} \tag{A.11}$$

$$\boldsymbol{U}_{63} = -(12+n^4\tilde{h}^2)\frac{1-\nu^2}{\tilde{h}} + \frac{12\lambda^2}{\tilde{h}} \tag{A.12}$$

$$\boldsymbol{U}_{72} = \frac{12}{\tilde{h}}\left\{(1-\nu^2)n^2 - \lambda^2\right\} \tag{A.13}$$

$$\boldsymbol{U}_{73} = (12+n^2\tilde{h}^2)\frac{(1-\nu^2)n}{\tilde{h}} \tag{A.14}$$

$$\boldsymbol{U}_{81} = -\frac{12\lambda^2}{\tilde{h}} \tag{A.15}$$

$$\boldsymbol{U}_{84} = (1-\nu)n^2\tilde{h} \tag{A.16}$$

APPENDIX B. COEFFICIENT MATRIX $U(\xi)$ OF CONICAL SHELL

$$\boldsymbol{U}_{11} = \boldsymbol{U}_{44} = -\nu\frac{1}{\xi} \tag{B.1}$$

$$\boldsymbol{U}_{12} = -\boldsymbol{U}_{78} = -\frac{\nu n}{\sin\alpha}\frac{1}{\xi} \tag{B.2}$$

$$\boldsymbol{U}_{13} = \boldsymbol{U}_{68} = -\frac{\nu}{\xi\tan\alpha} \tag{B.3}$$

$$\boldsymbol{U}_{18} = \frac{h}{12} \tag{B.4}$$

$$\boldsymbol{U}_{21} = -\boldsymbol{U}_{87} = \frac{n}{\xi\sin\alpha} \tag{B.5}$$

$$\boldsymbol{U}_{22} = -\boldsymbol{U}_{66} = \frac{1}{\xi} \tag{B.6}$$

$$\boldsymbol{U}_{23} = \frac{nh^2}{6\xi^3\tan\alpha\sin\alpha} \tag{B.7}$$

$$\boldsymbol{U}_{24} = -\frac{nh^2}{6\xi^2\tan\alpha\sin\alpha} \tag{B.8}$$

$$\boldsymbol{U}_{27} = \frac{h}{6(1-\nu)} \tag{B.9}$$

$$\boldsymbol{U}_{34} = \mathbf{U}_{56} = 1 \tag{B.10}$$

$$\boldsymbol{U}_{43} = \boldsymbol{U}_{65} = \frac{\nu n^2}{\xi^2\sin^2\alpha} \tag{B.11}$$

$$\boldsymbol{U}_{45} = \frac{1}{h} \tag{B.12}$$

$$\boldsymbol{U}_{53} = -\boldsymbol{U}_{64} = -\frac{(3+\nu)(1-\nu)n^2h}{\xi^3\sin^2\alpha} \tag{B.13}$$

$$\boldsymbol{U}_{54} = (1-\nu)(1+\nu+\frac{2n^2}{\sin^2\alpha})\frac{h}{\xi^2} \tag{B.14}$$

$$\boldsymbol{U}_{55} = \boldsymbol{U}_{88} = -(1-\nu)\frac{1}{\xi} \tag{B.15}$$

$$\boldsymbol{U}_{61} = -\frac{12(1-\nu^2)}{\xi^2 h\tan\alpha} \tag{B.16}$$

$$\boldsymbol{U}_{62} = -\frac{12n(1-\nu^2)}{\xi^2 h\tan\alpha\sin\alpha} \tag{B.17}$$

$$\boldsymbol{U}_{63} = -\frac{12(1-\nu^2)}{\xi^2 h\tan^2\alpha} - \left\{2+\frac{n^2(1+\nu^2)}{\sin^2\alpha}\right\}\frac{(1-\nu^2)n^2 h}{\xi^4\sin^2\alpha} + \frac{12\lambda^2}{h} \tag{B.18}$$

$$\boldsymbol{U}_{71} = \boldsymbol{U}_{82} = \frac{12(1-\nu^2)n}{\xi^2 h\sin\alpha} \tag{B.19}$$

$$\boldsymbol{U}_{72} = \frac{12(1-\nu^2)n^2}{\xi^2 h\sin\alpha} - \frac{12\lambda^2}{h} \tag{B.20}$$

$$\boldsymbol{U}_{73} = \frac{(1-\nu)n}{\xi^2\tan\alpha\sin\alpha}\left[\frac{12(1+\nu)}{h} + \left\{1+\frac{(1+\nu)n^2}{\sin^2\alpha}\right\}\frac{h}{\xi^2}\right] \tag{B.21}$$

$$\boldsymbol{U}_{74} = -\frac{nh(1-\nu)(2+\nu)}{\xi^3\tan\alpha\sin\alpha} \tag{B.22}$$

$$\boldsymbol{U}_{75} = -\frac{\nu n}{\xi^2\tan\alpha\sin\alpha} \tag{B.23}$$

$$\boldsymbol{U}_{77} = -\frac{2}{\xi} \tag{B.24}$$

$$\boldsymbol{U}_{81} = \left\{(1-\nu^2)\frac{1}{\xi^2} - \lambda^2\right\}\frac{12}{h} \tag{B.25}$$

$$\boldsymbol{U}_{83} = \left\{\frac{12(1+\nu)}{h} - \frac{n^2 h}{\xi^2\sin^2\alpha}\right\}\frac{1-\nu}{\xi^2\tan\alpha} \tag{B.26}$$

$$\boldsymbol{U}_{84} = \frac{(1-\nu)n^2 h}{\xi^3\tan\alpha\sin^2\alpha} \tag{B.27}$$