Latin American Journal of Solids and Structures
www.lajss.org

Ultimate strength formulations for FPSO stiffened panels under combined compression and shear with initial imperfections and damage

Abstract
Accidental collision of striking objects, such as a supply vessel, into the side panel of a FPSO highly influences its ultimate strength assessment. An empirical formula for predicting the ultimate strength of damaged stiffened panels under combined loading of shear and longitudinal compression is empirically derived in this work based on curve fitting of quasi-static nonlinear finite element (FE) analyses. Initial imperfections are introduced by scaling the first buckling mode shape and the damage is caused by residual deformation from a rigid sphere indentation. A pure shear loading is applied at several levels followed by compression loading using the modified Riks method for a number of sphere indentation damages. The suggested formula for a typical FPSO stiffened side shell panel presented an excellent correlation with the nonlinear FE results and can be particularly useful in the preliminary design phase (no damage) and for a quick estimation of the panel residual strength with indentation damage.

Keywords
ultimate strength, FPSO, edge shear, longitudinal compression, damage

Nicolau Antonio dos Santos Rizzo[a]
Marcelo Caire[b*]

[a] PETROBRAS, Engenharia, Rio de Janeiro, RJ, Brasil. E-mail: nicolau.rizzo@petrobras.com.br

[b] Núcleo de Estruturas Oceânicas (NEO), Programa de Engenharia Naval e Oceânica, Departamento de Engenharia Naval e Oceânica, Universidade Federal do Rio de Janeiro- UFRJ, Rio de Janeiro, RJ, Brasil. E-mail: caire@oceanica.ufrj.br

*Corresponding author

http://dx.doi.org/10.1590/1679-78254320

Received: July 26, 2017
In Revised Form: June 29, 2018
Accepted: July 03, 2018
Available online: July 10, 2018

1 INTRODUCTION

Floating, production, storage and offloading units (FPSOs) are employed to receive oil and gas through the riser system, process it and store on board the vessel tanks, remaining on position by means of a mooring system or dynamic positioning system as described by Moan et al. (2003). According to HSE (2000) report, during operation they can be struck by: a) supply vessels in service to and from the installation, b) tankers loading at the field, c) ships and fishing vessels passing the installation and d) floating installations such as flotels, for example. Part of such a collision energy may be dissipated as strain energy in the FPSO and in the striking vessel itself, possibly leading to a considerable amount of plastic strain. Due to lack of information about the ultimate strength assessment of the impacted zone, classification societies generally require to fix it immediately after damage. As an offshore repair can be cumbersome and costly, an accurate residual strength assessment is very important to help determining what kind of action is the most appropriate.

Ship and offshore structures consist of continuous panels stiffened by stiffeners and support members. As pointed out by Hughes and Paik (2010), the panels of ships may be subjected to a number of operational loading components (static and wave-induced) acting on the structure, such as: biaxial tension/compression, edge shear and in-plane bending, which are mainly induced by overall hull girder bending and torsion. Lateral pressure loading arises from water pressure and cargo weight. Although the extreme value of each component may not occur simultaneously, they interact with each other, affecting the ultimate strength interaction response.

Ship hull plates and stiffened panels mechanical response have been studied for decades. As highlighted by the ISSC Committee (ISSC, 2009), it is not possible to determine the true margin of structural safety under extreme loads if the ultimate strength remains unknown. As a large degree of geometric nonlinearity and material nonlinearity occurs before and after the ultimate strength capacity has been reached, non-linear elastoplastic FE analyses is one of the preferred methods for *limit state* based assessment. The main influential factors for such calculations are related to: a) geometrical factors; b) material parameters associated to plasticity, including strain hardening, and fracture; c) initial imperfections due to fabrication and welding; d) residual stresses caused by damage; e) temperature factors and f) strain rate dependent response.

The ultimate strength response of panels under pure shear loading received some research attention in the last years. Alinia (2005) performed a study into optimization of stiffeners in plates subjected to shear loading

(cc) BY

using FE analysis followed by Alinia and Dastfan (2006) who studied the effect of surrounding members (i.e. beams and columns) on the overall behavior of thin steel plate shear walls. They conclude that the flexural stiffness of surrounding members has no significant effects, either on elastic shear buckling or on the post-buckling behaviour. The torsional rigidity has a significant effect only on the elastic buckling load, and the extensional stiffness slightly affects the post-buckling capacity. In a further study, Gheitasi and Alinia (2010) investigated the slenderness classification of unstiffened metal plates under shear loading dividing it into slender, moderate and stocky categories. Zhang et al. (2008) developed a simple formula for the ultimate shear strength of plates and verified against Abaqus (2014) FE results and a large number of published results. They also assessed the suitability of the formula application for a stiffened panel structure representing the side shell of an oil tanker. From the good correlation obtained they concluded that the ultimate shear strength of the stiffened panel could be determined analyzing a single plate of the same thickness with simply supported boundaries and edges constrained to remain straight. Rizzo et al. (2014) performed a parametric FE analysis, with a similar stiffened panel as the previous mentioned work, and observed that as the thickness value increases, the ultimate strength of the stiffened panel tends to be in closer agreement with the plate. They have also observed that, as expected, higher values of initial imperfection amplitudes (based on the first buckling mode) leads to lower limit state values.

The ultimate shear strength reduction characteristics of steel plates due to local denting damage have been investigated by Paik (2005). The damage has been modeled as initial geometric deformation without taking into account the residual stresses or strains. He observed that as the dent diameter increases the plate ultimate shear strength decreases significantly and that the worst situation occurs when the dent is located at the plate center.

Paik et al. (2003) employed nonlinear FE analyses to investigate the ultimate strength of dented steel plates under axial compressive loads. As in his work for shear loading, the damage was considered as an initial stress free deformation in the mesh. They observed that as the dent location is closer to the unloaded plate edge the ultimate strength decreases compared to the central position. Raviprakash et al. (2012) studied the influence of various dent parameters (dent length, dent width, dent depth and angle of orientation of the dent) on the static ultimate strength of thin square plates of different thicknesses under uniaxial compressive loading.

For stiffened panels under compressive loading with damage, Xu and Soares (2013) has recently performed quasi-static nonlinear FE analysis including the residual stress and the dent deflections caused by indentation. From the case study performed it has been observed that the residual stress caused by the indentation slightly affects the ultimate strength of the dented stiffened panels considered.

In terms of ultimate strength formulations, Paik et al. (2001) developed relations of long and/or wide steel plate elements subject to a combination of four load components, namely longitudinal compression/tension, transverse compression/tension, edge shear, and lateral pressure loads. The plate element is assumed to be simply supported along all (four) edges kept straight.

From the literature review performed, one can observe that none of the previous researchers considered the combined action of shear and compression in a limit state assessment of a stiffened panel structure with residual plastic strain caused by indentation.

In the present work, a quasi-static nonlinear FE model is developed in Abaqus (2014) for a typical FPSO stiffened side panel subjected to combined loading of edge shear and longitudinal compression as detailed in Section 2. Initial imperfections are included scaling the first buckling mode shape amplitude followed by damage introduction with the indentation of a rigid sphere in the central part of the stiffened panel. In the next analysis step the indenter is removed, allowing the model to simulate the panel springback effect. The residual stress is then considered in the ultimate strength assessment using the Riks method for a variety of indenter displacements. Such nonlinear FE analysis are quite time consuming for preliminary design phases and, consequently, robust semi-empirical methods are preferred in that stage. In that sense, formulations are proposed in Section 3 (with and without indentation damage) and the coefficients adjusted using the FE model results. A very good correlation is observed for the case study presented where one can observe that the ultimate strength is more sensitive to compression than to shear and that higher levels of damage lead to lower values of limit state strength, as expected.

2 NONLINEAR FINITE ELEMENT MODEL OF FPSO STIFFENED PANELS

The nonlinear FE model of a typical FPSO stiffened panel is detailed in this section. The general purpose finite element package Abaqus (2014) is employed for model development considering geometrical and material nonlinearities. The 4-node general-purpose shell, reduced integration with hourglass control, finite membrane strain element is employed in the analyses. The spherical indenter is considered as an analytical rigid surface. Inertia effects are disregarded, as the objective is to evaluate the effect of the resulting plastic deformation damage in the

ultimate strength assessment under combined longitudinal compression and edge shear loading. The model geometry and material parameters are presented in Section 2.1 while the prescribed boundary conditions are described in Section 2.2. Each of the following analyses steps are presented in Section 2.3: i) buckling analysis for initial imperfection estimation based on the first response mode, ii) quasi-static analysis of the rigid body indentation to simulate the damage and the spring back response, iii) quasi-static analyses subjected to shear loading taking into account the initial imperfections and the residual stresses from indentation followed by iv) the modified Riks method (Crisfield (1981)) analyses applying compression to estimate the ultimate strength under combined loading. For the case with no indentation damage (i.e. only initial imperfections) step ii) is disregarded.

2.1 Model definition

A number of model types can be employed for the ultimate strength assessment of a ship hull, including: a) the entire hull model, b) one to three cargo hold models and c) stiffened panels including different number of longitudinal stiffeners and web frames and even d) a single panel itself (ISSC, 2009). The complexity in defining correct boundary conditions increases as the model goes from a) to d), especially if residual stress is present. In general, if there is uncertainty about the correct boundary conditions, it is probably better to include that portion in the structural model, even if more computational resources are required. A stiffened panel with six (6) stiffeners of length a and distance b from each other (extended in the longitudinal with an additional web frame to each side, as shown in Fig. 1) has been selected for the present case study, corroborated by the verification of zero equivalent plastic strain in the model boundaries after collision. The main dimensions are presented in Table 1.

Table 1: *Panel dimensions.*

Dimensions	[mm]
Longitudinal length, a	5300
Space between stiffeners, b	850
Plate thickness, t_p	22
Web thickness, t_w	11
Web height, h_w	500
Flange thickness, t_f	14
Flange width, w_f	150

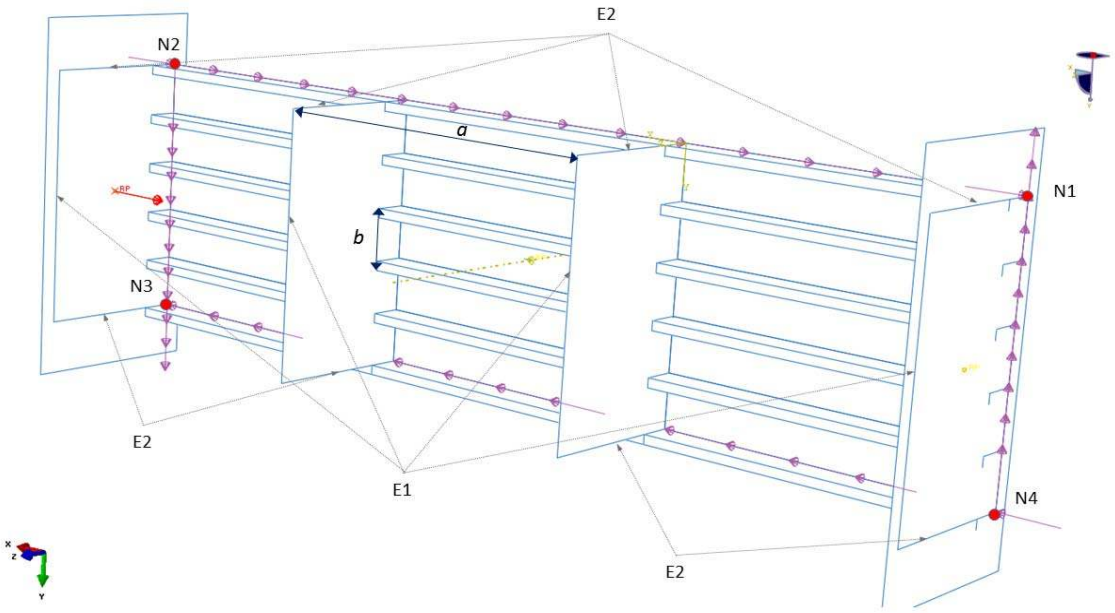

Figure 1: *Stiffened side panel model general view subjected to combined longitudinal compression (applied in the reference point) and edge shear loading.*

The outermost contact point of the rigid sphere is located in the center of the panel, both in longitudinal and transversal directions. A spherical rigid surface with diameter $D_b = 1000\,mm$ is employed to cause the indentation damage. For the contact formulation, the hard contact pressure-overclosure relation is used with no friction between the surfaces. The three dimensional 4-node S4R quadrilateral shell element is employed for the mesh. The following discretization scheme is selected after a mesh sensitivity study considering the ultimate strength under pure compression, as presented in Table 2: a) Plate - 50 x 50 mm and b) Longitudinal stiffeners and frames - 100 x 100 mm.

Table 2: *Mesh sensitivity study under pure compression – Load proportionality factor (LPF)*

Mesh	Plate [mm]	Stiffeners / frames [mm]	LPF
1	100 x 100	100 x 100	4.573
2	75 x 75	100 x 100	4.638
3	50 x 50	100 x 100	4.625
4	25 x 25	100 x 100	4.618
5	50 x 50	50 x 50	4.621
6	50 x 50	75 x 75	4.623

The effect of strain hardening on the elastoplastic behavior of a stress-free dented steel plate under edge shear loads has been investigated by Paik (2005), who observed larger ultimate shear strength values when hardening was considered, but adopted the more conservative elastic and perfectly plastic material model for the proposed empirical formulation assessment. For the present case, i.e., a panel subjected to longitudinal compression and edge shear loading, plastic hardening gives an increase in the ultimate strength because the loss of stability is followed by the appearance of plastic strains and, consequently, material hardening. In that sense, for formulation simplification purposes and to be on the conservative side, an elastic perfectly plastic material model with no hardening is employed to the steel material. Therefore, all the material parameters required are given by the following properties: i) elastic modulus, $E = 210\,GPa$ ii) Poisson ratio $\nu = 0.3$ and iii) yield strength: $\sigma_Y = 355\,MPa$ ($\tau_Y = \sigma_Y / \sqrt{3} = 204.96\,MPa$).

2.2 Boundary conditions

The X axis is taken in the direction parallel to the FPSO length and the Y axis is pointing upwards toward the deck. Boundary condition are used to eliminate the rigid body motion, therefore the corner nodes (N1, N2, N3 and N4) have the translation fixed in Z -direction. In addition, the corner node N1 is also fixed in the translational X and Y directions and the opposite corner node N3 is fixed in the translation Y direction. The Z direction web frame edges (E2) boundary conditions are fixed in Z translation and Y rotational degrees of freedom. For the Y direction web frame edge (E1), the rotation degrees of freedom are fixed in X and Z directions.

2.3 Analysis steps

Initial imperfections:

Geometric imperfections arising from the fabrication process are subjected to significant uncertainty related to magnitude and spatial variation and may cause substantial reduction of the ultimate strength of stiffened plates. A usual approach to consider imperfections in the numerical FE analysis is to scale its buckling mode by a factor δ usually specified by classification socities rules. In the present case study, for the first buckling mode calculation, the inner stiffened panel was considered with thinner plate thickness in order to induce the imperfection in the indentation area. The subsequent analyses were performed with the original thickness. The *Buckle command from Abaqus (2014) is employed in this step and Figure 2 illustrates the first buckling mode shape response.

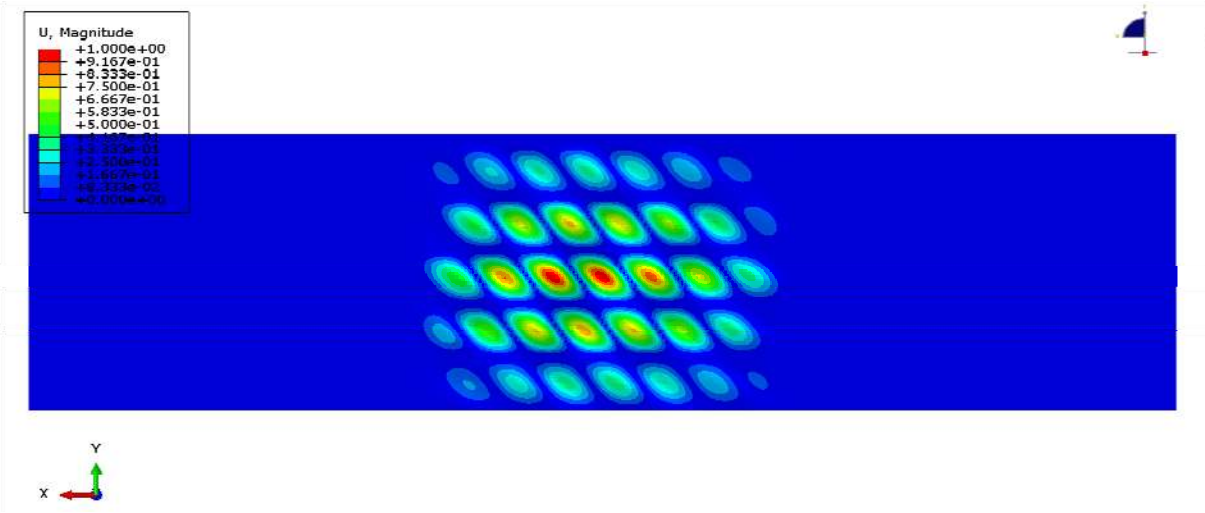

Figure 2: *First buckling mode shape.*

Collision damage and springback response: The second analyses step consists in a rigid sphere indentation in the middle of the model. The quasi-static analyses methodology disregards the dynamic effects and its influence in the response. For the parametric variation, four displacements Δ are applied: 50, 100, 200 and 300 mm. Figure 3 shows the stress distribution for the case with a 200 mm sphere indentation and an initial imperfection amplitude of $\delta = 5\,mm$. Once the rigid sphere is removed, the stiffened panel will spring back, recovering the elastic deformation. The non-recoverable plastic deformation causes a residual stress distribution which remains in the further steps and the permanent plastic strain as shown, respectively, in Figures 4 and 5.

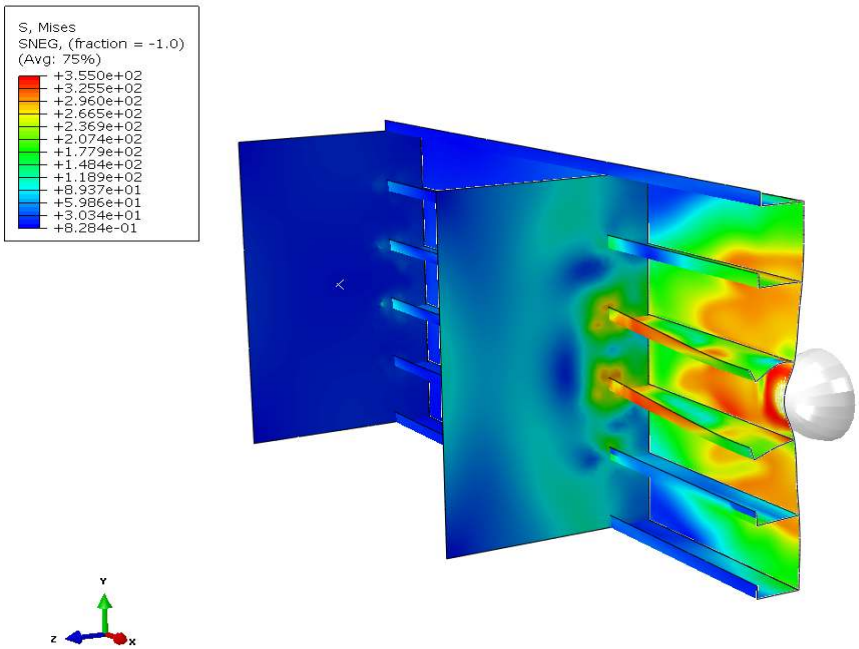

Figure 3: *Stress distribution at maximum indentation – 200 mm displacement.*

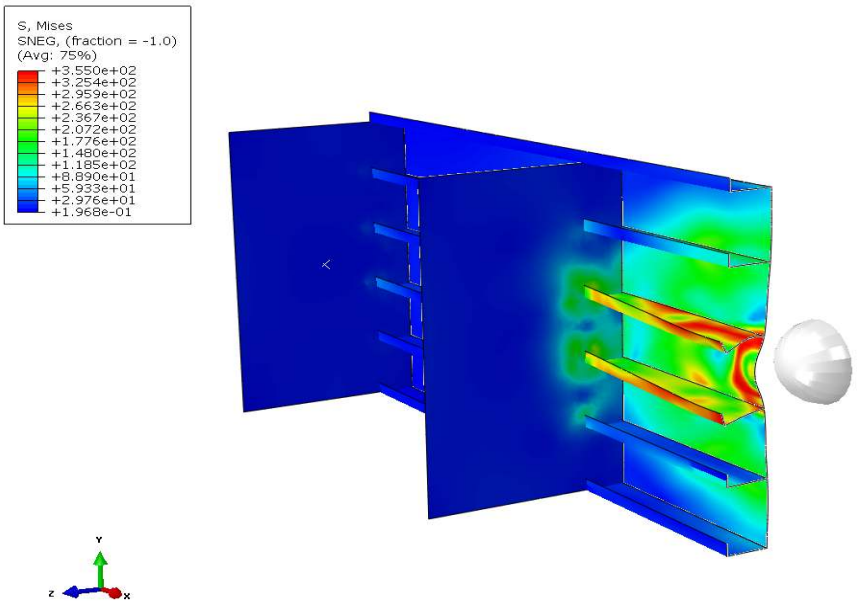

Figure 4: *Residual stress distribution after indentation (sbringback) – 200 mm displacement.*

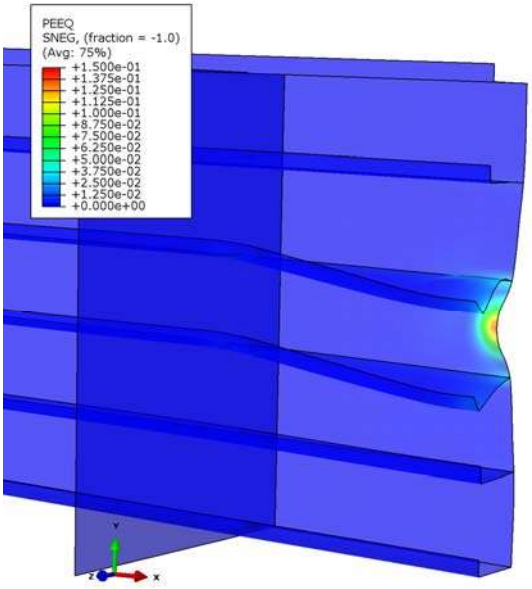

Figure 5: *Equivalent plastic strain after indentation – 200 mm displacement (Scale factor = 2)*

Shear loading: Edge shear is the first loading to be applied after damage caused by sphere indentation. In order to further apply the longitudinal compression for a given applied edge shear, two rigid surfaces are modeled and placed in the model endings. For one, all the degrees of freedom are restrained and for the other, only the X translation is free while the plate itself is free to rotate about Z axis. Due to the frictionless contact formulation adopted, the model endings are allowed to tangentially slide without separation between the surfaces. Figure 6 illustrates the final configuration of the plate after an edge shear loading of $3000\,N/mm$. The visualization is scaled by a factor of 25.

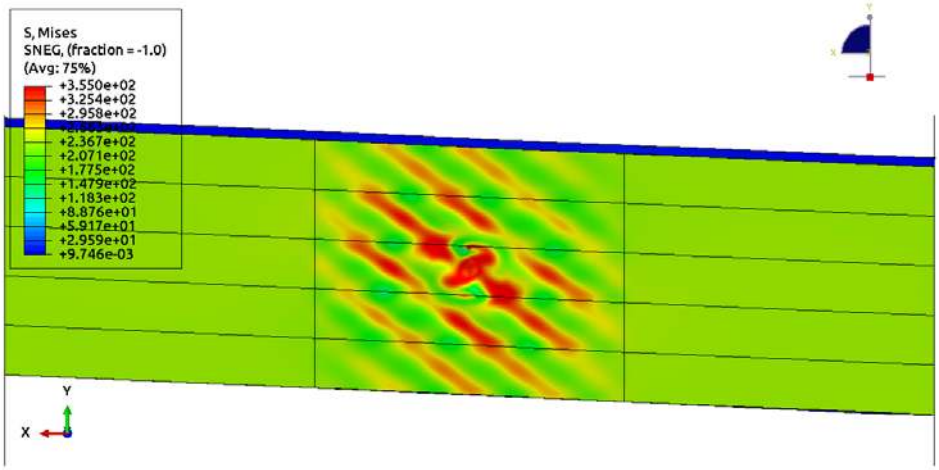

Figure 6: *Shear loading step ($\Delta = 200\,mm$, $\delta = 5\,mm$, Scale factor = 25).*

Ultimate strength: Longitudinal compression is the final loading to be applied in the rigid surfaces for several levels of pre-applied edge shear loading. The ultimate strength capacity is obtained by applying the loading beyond the limit point, i.e., where the load-displacement response shows a negative stiffness and the structure releases strain energy to remain in equilibrium. The modified Riks method described by Crisfield (1981) and implemented in Abaqus (2014) using Newton's method to solve the nonlinear equilibrium equations is an algorithm that allows effective solution of such cases and is consequently employed here. As described in Abaqus manual, the loading during a Riks step is always proportional, being the current load magnitude described by: $P_{total} = P_0 + \lambda(P_{ref} - P_0)$, where P_0 are any loads that exist at the beginning of the step (edge shear in the present case), P_{ref} is the reference load (longitudinal compression) and λ is the load proportionality factor (LPF). This approach provides solutions regardless of whether the response is stable or unstable. For illustration purposes, Figure 7 shows the load proportionality factor versus "arc-length" for two indenters displacements ($\Delta = 50$ and $200\,mm$) for an edge shear loading of $3000\,N\,/\,mm$. The ultimate limit strength is calculated when the derivative of the curve is equal to zero. Figure 8 illustrates the configuration of the von Mises stress distribution beyond the limit point (arc-length value of approximately 2.85) under the combined edge shear and longitudinal compression loading taking into account the initial imperfection and damage. The interaction relation curve $\sigma\,/\,\sigma_y$ vs $\tau\,/\,\tau_y$ for different values of initial imperfection amplitude δ without plastic damage from indentation is presented in Figure 9. In Section 3.2, the same relation is presented for a number of indentation displacements, keeping a constant initial imperfection given by $\delta = 5\,mm$. The results discussion is presented in the next section together with the proposed ultimate strength formulation.

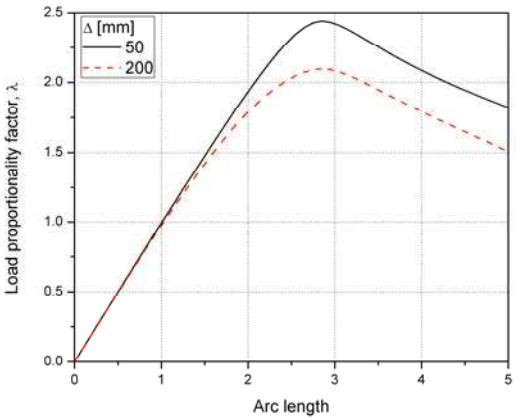

Figure 7: *Load proportionality factor versus arc-length for two indenter displacements (50 and 200 mm) under constant edge shear loading.*

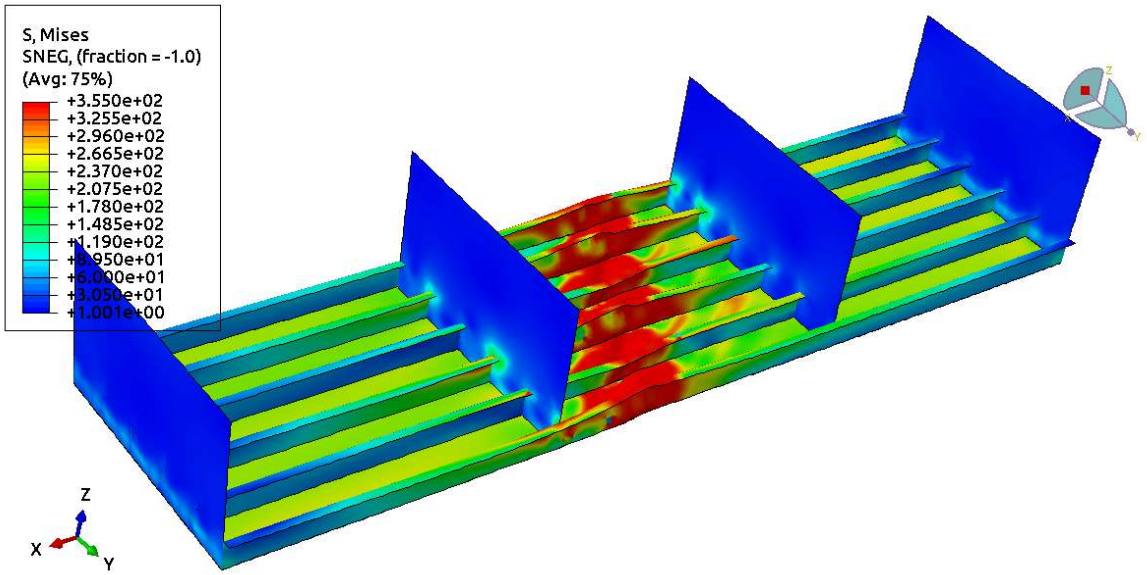

Figure 8: *Ultimate strength under combined loading (Scale factor = 2).*

3 ULTIMATE STRENGTH FORMULATIONS

Two formulations are presented, one in Section 3.1 to evaluate the effect of different initial imperfections amplitudes (based on the first buckling mode) without damage from indentation and another in Section 3.2 to evaluate the indenter damage effect considering a fixed value of initial imperfection amplitude.

3.1 Without damage ($\Delta = 0$)

Figure 9 illustrates the ultimate strength interaction relation for stiffened panel under combined edge shear and longitudinal compression for different imperfection amplitudes δ and without indentation damage. As expected, the higher the initial imperfection the lower the ultimate strength, following a proportional relation for the three cases analyzed. It can also be observed that the curves for each imperfection amplitude follows a typical ellipsoid shape and consequently the following relation is proposed,

$$\left(\frac{\sigma / \sigma_y}{a_\delta}\right)^{\alpha_\delta} + \left(\frac{\tau / \tau_y}{b_\delta}\right)^{\beta_\delta} = 1 \tag{1}$$

where a_δ, b_δ and β_δ are coefficient functions dependent on the initial imperfection amplitude δ according to the following,

$$a_\delta = a_{\delta 0} + a_{\delta 1}\left(\frac{\delta}{t_p}\right) \tag{2a}$$

$$b_\delta = b_{\delta 0} + b_{\delta 1}\left(\frac{\delta}{t_p}\right) \tag{2b}$$

$$\beta_\delta = \beta_{\delta 0} + \beta_{\delta 1}\left(\frac{\delta}{t_p}\right) \tag{2c}$$

and α_δ is constant and equal to 2. The coefficients are adjusted employing the nonlinear least square method based on the FE results and presented in Table 3. Figure 9 shows the comparison between the semi-empirical model fitting and the FE results, where a very good correlation can be observed.

Table 3: *Coefficients – initial imperfection amplitude*

i	0	1
$a_{\delta i}$	0.987	-0.181
$b_{\delta i}$	0.0158	-0.113
$\beta_{\delta i}$	2	-0.22

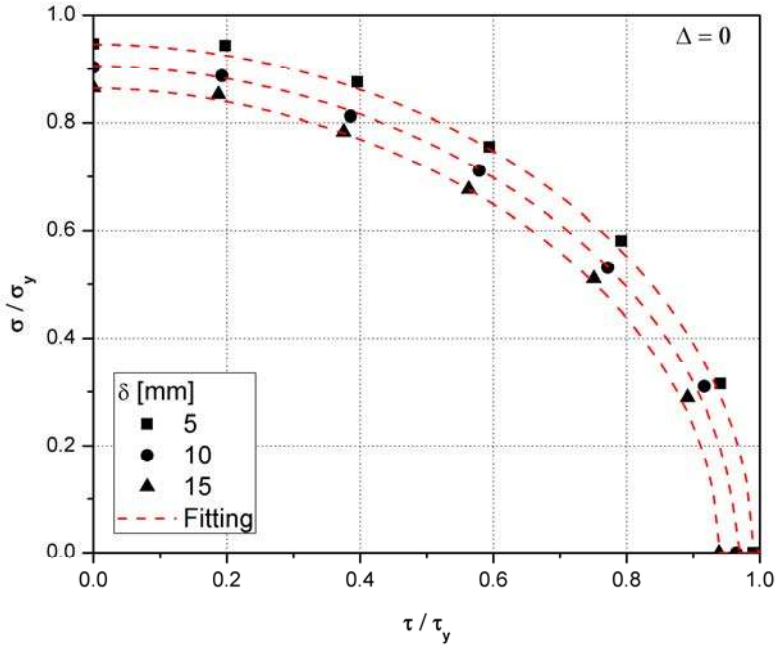

Figure 9: *Interaction relation and formulation fitting for longitudinally stiffened panel under combined longitudinal compression and edge shear loading for different initial imperfection amplitudes.*

3.2 With damage ($\Delta > 0$)

According to the DNV-OS-C401 (Det Norske Veritas, 2010) rule, the maximum out of plane displacement for plates (initial imperfection amplitude) is 0.5% of the distance between stiffeners. Consequently, in all the subsequent results presented, the imperfection amplitude was fixed and given by $\delta = 5\,mm$.

The total energy absorbed by a FPSO in a collision situation is an important parameter to be observed. Depending on its magnitude, it can be close to the structure accidental limit strength energy as defined in the standard NORSOK N-003 (NORSOK Standard, 2007). The collision energy can be estimated on the basis of the relevant masses, velocities and striking ship directions where the velocity can be determined based on the assumption of a drifting ship, or on the assumption of erroneous operation. Assuming the FPSO as a fixed installation and the striking ship as a rigid indenter, the collision energy to be dissipated as total strain energy E may be approximately described by,

$$E = \frac{1}{2}(m_s + a_s)v_s^2 \tag{3}$$

where m_s is the ship mass, a_s the ship added mass and v_s the impact speed.

Figure 10 shows the total strain energy E resulting from the FE simulations normalized with the accidental limit strength energy E_{ALS} versus the residual displacement Δ_R normalized with the bulb diameter $D_B = 1000\,mm$. E_{ALS} is calculated based on NORSOK N-003 (2007) recommendations for frontal collisions in early phases of vessel design. Considering a supply vessel mass of 5000 tons, a speed of 2 m/s and a hydrodynam-

ic added mass of 10% for bow and stern impact, leads to a value of $E_{ALS} = 11\,MJ$. The plot suggests a quadratic fitting that can be obtained with the following relation,

$$\frac{E}{E_{ALS}} = B_1 \frac{\Delta_R}{D_b} + B_2 \left(\frac{\Delta_R}{D_b} \right)^2 \tag{4}$$

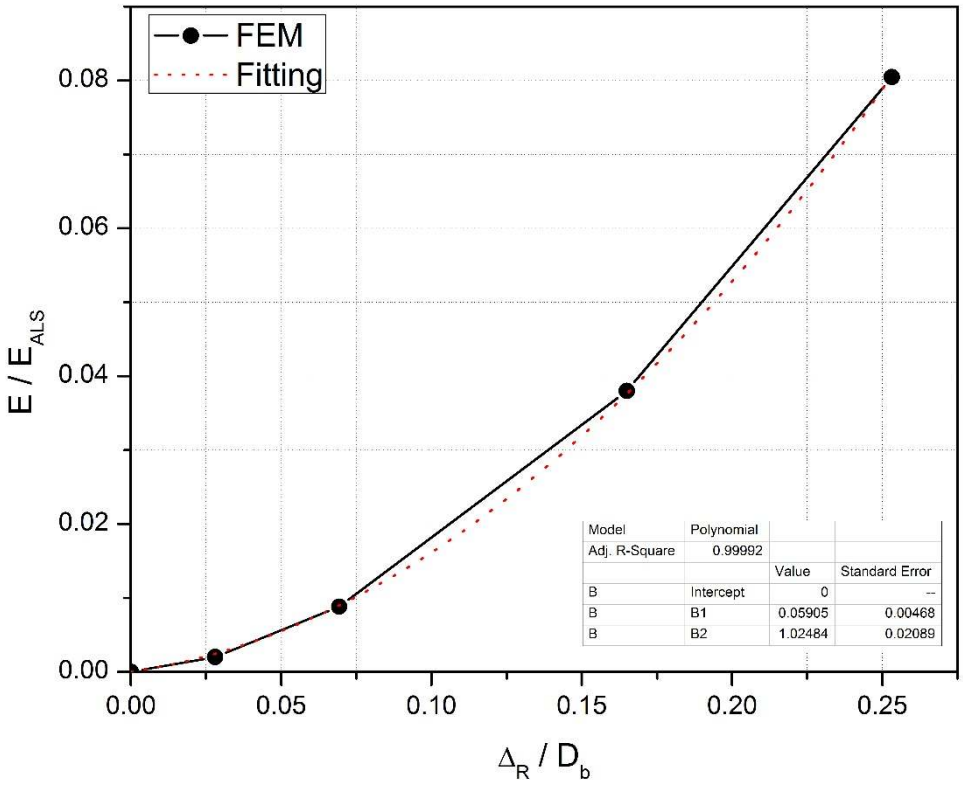

Figure 10: *Normalized energy as a function of normalized residual displacement ($E_{ALS} = 11\,MJ$, $D_B = 1000\,mm$).*

The adjusted coefficients B_1 and B_2 are also shown in Figure 10. Table 4 presents the normalized total strain energy and normalized residual displacement after indentation for the different values of Δ analyzed. It can be observed that the total strain energy considering a sphere indentation of $\Delta = 300\,mm$ leads to only approximately 8% of the NORSOK standard accidental limit strength energy. It should also be noted that Δ_R is a quantity that can be estimated in the field and used as basis for an estimation of the collision energy and comparison to the accidental limit strength energy provided by the standard.

Table 4: *Residual displacement and energy for each bulb displacement*

$\Delta\,[mm]$	Δ_R / D_b	E / E_{ALS} %
50	0.028	0.20
100	0.069	0.88
200	0.165	3.80
300	0.253	8.05

A number of studies for the development of empirical design equations for plates ultimate strength assessment have been performed in the past, but not considering combined longitudinal compression and edge shear

loading with residual plastic strain damage. Figure 11 shows the ultimate strength interaction relation (σ / σ_y vs τ / τ_y) for the FPSO stiffened panel under combined longitudinal compression and edge shear loading for the different sphere indentations applied. It can be observed, as expected, that higher levels of indentation leads to lower ultimate strength and that the influence is higher for higher values of σ / τ.

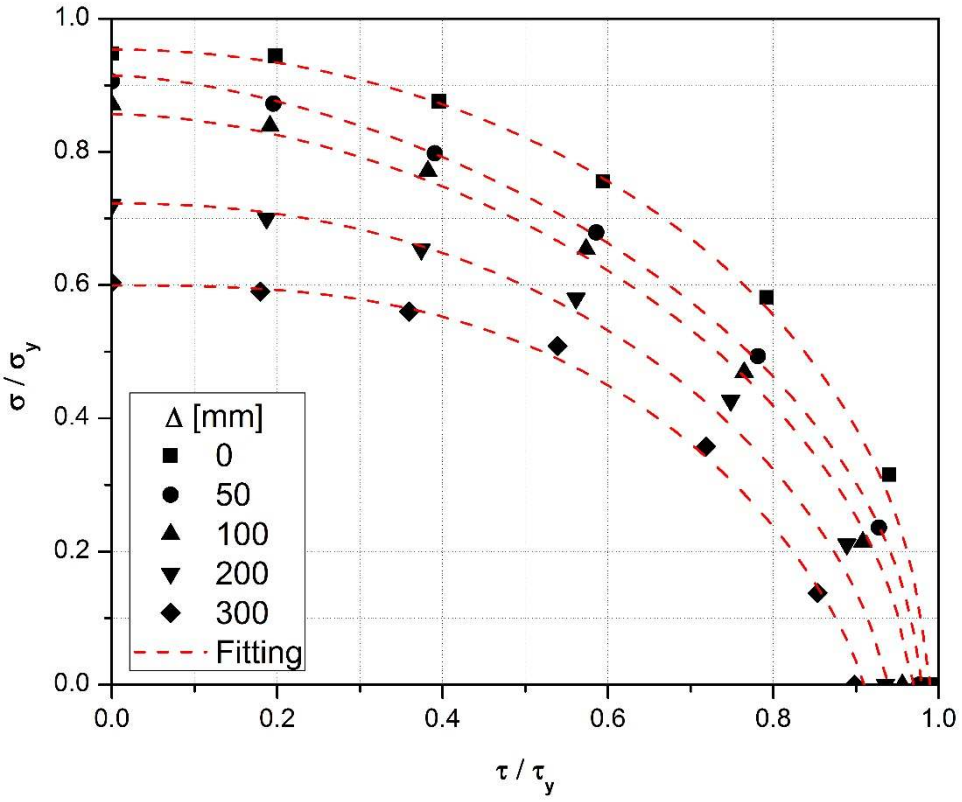

Figure 11: *Interaction relation and formulation fitting for longitudinally stiffened panel under combined longitudinal compression and shear loading for different damages* - $D_B = 1000\,mm$, $\delta = 5\,mm$

Based on a similar observation for the interaction relation without damage previously presented, where the non-dimensional curves follow a shape similar to an ellipse for the different levels of damage (rigid sphere indentation) the following relation is proposed,

$$\left(\frac{\sigma / \sigma_y}{a_\Delta}\right)^{\alpha_\Delta} + \left(\frac{\tau / \tau_y}{b_\Delta}\right)^{\beta_\Delta} = 1 \tag{5}$$

where now, the coefficients a_Δ, b_Δ, α_Δ and β_Δ are functions dependent on the residual displacement Δ_R with a fixed sphere diameter D_b and given by,

$$a_\Delta = a_{\Delta 0} + a_{\Delta 1}\left(\frac{\Delta_R}{D_b}\right) \tag{6a}$$

$$b_\Delta = b_{\Delta 0} + b_{\Delta 1}\left(\frac{\Delta_R}{D_b}\right) \tag{6b}$$

$$\alpha_{\Delta} = \alpha_{\Delta 0} + \alpha_{\Delta 1}\left(\frac{\Delta_R}{D_b}\right) \tag{6c}$$

$$\beta_{\Delta} = \beta_{\Delta 0} + \beta_{\Delta 1}\left(\frac{\Delta_R}{D_b}\right) + \beta_{\Delta 2}\left(\frac{\Delta_R}{D_b}\right)^2 \tag{6d}$$

Based on the FE results, Eq. (5) is adjusted based on the nonlinear least square method and the resulting coefficients presented in Table 5. Figure 11 shows the comparison between the semi-empirical model fitting and the FE results, where an excellent correlation can also be observed.

Table 5: *Coefficients – damage condition*

i	0	1	2
$a_{\Delta i}$	0.954	-1.40	-
$b_{\Delta i}$	0.984	-0.30	-
$\alpha_{\Delta i}$	1.981	-2.67	-
$\beta_{\Delta i}$	1.529	2.35	10.5

4 SUMMARY AND CONCLUSIONS

A nonlinear FE model for a typical FPSO side shell stiffened panel, subjected to combined edge shear and longitudinal compression loading is presented and a parametric study performed to investigate the initial imperfection and damage influences on the panel ultimate strength. Initial imperfections are introduced by scaling the first buckling mode shape and the damage is caused by residual plastic deformation from a rigid sphere indentation.

A pure shear loading is applied at several levels followed by compression loading using the modified Riks method for a number of sphere indentation damages. The main observations from the nonlinear FE analyses carried out can be summarized as follows:

i. higher values of initial imperfections and damage lead to lower ultimate strength, as expected.

ii. the ultimate strength with damage under combined loading is more sensitive to compression than to shear, as it has been observed that damage influence increases as the relation σ / τ increases.

Based on the parametric analyses, it has been observed that the non-dimensional interaction relation curves (σ / σ_Y vs τ / τ_Y) present a form similar to an ellipsoid. A semi-empirical formulation has been suggested with parameters dependent on the initial imperfection amplitude (when no damage is considered). Another formulation has been proposed with parameters dependent on the residual displacement for a specific value of sphere radius and initial imperfection amplitude. Both presented an excellent fitting of the nonlinear FE results and can be particularly useful in the preliminary design phase (no damage) and for a quick estimation of the panel residual strength with damage.

To extend its offshore field applicability, further analyses are required to generalize the formulation as function of both the residual displacement, sphere radius and relative position of the contact point in the stiffened panel parameters combination.

ACKNOWLEDGMENTS

The authors acknowledge the support of ANP-PRH 03 and PETROBRAS for the present work.

References

Moan, T., Amdahl, J., Wang, X.Z. and Spencer, J., (2003). “Risk Assessment of FPSOs with Emphasis on Collision,” SNAME Transactions, 110:307-339.

Health and Safety Executive, (2000). “Collision resistance of ship-based structures to side impact”, OTO 053/2000.

International Ship and Offshore Structure Congress (ISSC). (2009). "Ultimate strength. Report of Technical Committee III.1", International Ship and Offshore Structures Congress, Seoul, Korea, August.

Hughes, O. F., Paik, J.K., (2010). "Ship structural analysis and design". The Society of Naval Architects and Marine Engineers (New Jersey).

Alinia, M. (2005). "A study into optimization of stiffeners in plates subjected to shear loading." Thin-Walled Structures, 43(5):845 – 860.

Alinia, M. and Dastfan, M. (2006). "Behaviour of thin steel plate shear walls regarding frame members." Journal of Constructional Steel Research, 62(7):730 – 738.

Gheitasi, A. and Alinia, M. (2010). "Slenderness classification of unstiffened metal plates under shear loading." Thin-Walled Structures, 48(7):508 – 518.

Zhang, S., Kumar, P., and Rutherford, S. E. (2008). "Ultimate shear strength of plates and stiffened panels." Ships and Offshore Structures, 3(2):105–112.

ABAQUS, (2014), "ABAQUS Documentation". Dassault Systèmes, Providence, RI, USA.

Rizzo, N.A.S, Amante D.A., Estefen S.F., (2014). "Ultimate shear strength of stiffened panels for offshore structures." OMAE2014-23155, 33rd International Conference on Ocean, Offshore and Arctic Engineering; vol. 4A: Structures, Safety and Reliability. San Francisco, California, USA.

Paik, J. K. (2005). "Ultimate strength of dented steel plates under edge shear loads." Thin-Walled Structures, 43(9):1475 – 1492.

Paik, J. K., Lee, J. M., Lee, D. H. (2003). "Ultimate strength of dented steel plates under axial compressive loads." International Journal of Mechanical Sciences, 45:433-448.

Raviprakash, A., Prabu, B., and Alagumurthi, N. (2012). "Residual ultimate compressive strength of dented square plates." Thin-Walled Structures, 58:32 – 39.

Xu, M. C. and Soares, C. G. (2013). "Assessment of residual ultimate strength for wide dented stiffened panels subjected to compressive loads." Engineering Structures, 49:316 – 328.

Paik, J. K., Thayamballi, A. K., and Kim, B. J. (2001). "Advanced Ultimate Strength Formulations for Ship Plating Under Combined Biaxial Compression/Tension, Edge Shear, and Lateral Pressure Loads." Marine Technology, 38(1):9-25.

Crisfield, M.A., (1981). "A fast incremental/iterative solution procedure that handles snap-through" Computer & Structures, 13:55 – 62.

Det Norske Veritas, (2010), "DNV-OS-C401 - Fabrication and Testing of Offshore Structures"

NORSOK Standard, (2007), "N-003 – Actions and action effects"