www.lajss.org
Latin American Journal of Solids and Structures 1 (2004) 219–232

Improvements in the dynamic behaviour of two degree-of-freedom planar open-loop mechanisms

Tarcisio A. H. Coelho*, Liang Yong and Valter F. A. Alves

Department of Mechatronics and Mechanical Systems Engineering
Polytechnic School, University of Sao Paulo
Av. Prof. Mello Moraes 2231, Sao Paulo SP, 05508-900, Brazil

Abstract

Some improvements in the dynamic behavior of two-degree-of-freedom planar articulated open-loop mechanisms can be achieved by means of adaptive balancing. Among the benefits of this technique are static balancing, complete decoupling of dynamic equations and annulling the reactive moment at base. The procedure to accomplish these goals consists of adding movable compensation inertias to the kinematic chain of the mechanism. Through a performed simulation, we provide a comparison between a mechanism using the proposed method with an unbalanced one.

Keywords: mechanism, robot manipulators, balancing, decoupling

1 Introduction

Mechanisms with open-loop kinematic chains present highly complex, nonlinear and strongly coupled dynamic models. Because of these characteristics, the consideration of a complete dynamic model is not viable for real time applications using simple classical feedback control strategies – like PID – with satisfactory results [6].

Paul [10] considered a simplification of the complete dynamic model, taking into account only torques (or forces) due to effective inertia and gravitational effects. Another different approach to the problem is to create efficient algorithms for the dynamic model computation either using a solution table, dealing with a model expressed symbolically [9] or even removing redundantly calculated terms [4].

Balancing [11] is also another attractive alternative to this issue. Typically, it brings some modifications in the architecture of the original mechanism, which actually makes simpler its dynamic model and, as a consequence, its control as well. Besides control simplification, balancing can also provide reduction or even removal of reactive moment at the mechanism base or locomotion platform, preventing it to vibrate and suffer unnecessary wear [2, 7].

* Corresponding author Email: tarcisio.coelho@poli.usp.br Received 27 Feb 2004; In revised form 25 March 2004

Even though some authors [6, 8] discussed control simplification and reduction of actuator torques (or forces) simultaneously, most of them focused on one of these objectives. Besides, the influence of the payload, or even its variation, is rarely mentioned [3]. Only a few published articles treated of balancing of open-loop mechanisms, which eliminates dynamic terms due to cross inertia, centripetal and Coriolis forces [1]. Diken [5] recommended minimizing the consumed energy as a criterion to evaluate compensation inertias, whose values are dependent on the path chosen and adopted velocity profiles.

This article presents some improvements in the dynamic behavior of two-degree-of-freedom planar articulated open-loop mechanisms, which can be achieved by means of adaptive balancing. Among the benefits of this technique are static balancing, complete decoupling of dynamic equations and annulling the reactive moment at base. The procedure to accomplish these goals consists of adding movable compensation inertias to the kinematic chain of the mechanism. Through a performed simulation, we provide a comparison between a mechanism using the proposed method with an unbalanced one.

2 Adaptive balancing

In this section, we present the dynamic models of two-degree-of-freedom planar articulated open-loop kinematic chain mechanisms subjected to two different conditions: unbalanced and adaptively balanced. Such mechanisms are composed by three links: one fixed link – base – and two moving ones – links 1 and 2 (Figure 1). These links are connected by two revolute joints. This mechanical system, driven by two independent actuators, can be employed as a robot manipulator for "pick-and place" operations. During part of its motion cycle, the payload remains temporarily attached to link 2 by a gripper.

In order to introduce the equations of motion, we define the following parameters and variables:

ℓ_1 - distance between revolute joint centers in link 1 (unbalanced mechanism);
ℓ_2 - distance between revolute joint center and gripper tip in link 2;
ℓ_{1c} - position of the center of mass of link 1 with respect to the center of the revolute joint that connects link 1 to the base (unbalanced mechanism);
ℓ_{2c} - position of the center of mass of link 2 with respect to the center of the revolute joint that connects link 2 to link 1 (unbalanced mechanism);
m_1 - mass of link 1 (unbalanced mechanism);
m_2 - mass of link 2 (unbalanced mechanism);
m_0 - payload mass;
I_1 - mass moment of inertia of link 1 with respect to the center of mass of the same link (unbalanced mechanism);
I_2 - mass moment of inertia of link 2 with respect to the center of mass of the same link (un-

balanced mechanism);
θ_1 - angular displacement of link 1 relative to the base;
θ_2 - angular displacement of link 2 relative to link 1;
$\dot{\theta}_1$ - angular velocity of link 1 relative to the base;
$\dot{\theta}_2$ - angular velocity of link 2 relative to link 1;
$\ddot{\theta}_1$ - angular acceleration of link 1 relative to the base;
$\ddot{\theta}_2$ - angular acceleration of link 2 relative to link 1;
τ_1 - driving torque furnished by the actuator that moves link 1;
τ_2 - driving torque furnished by the actuator that moves link 2.

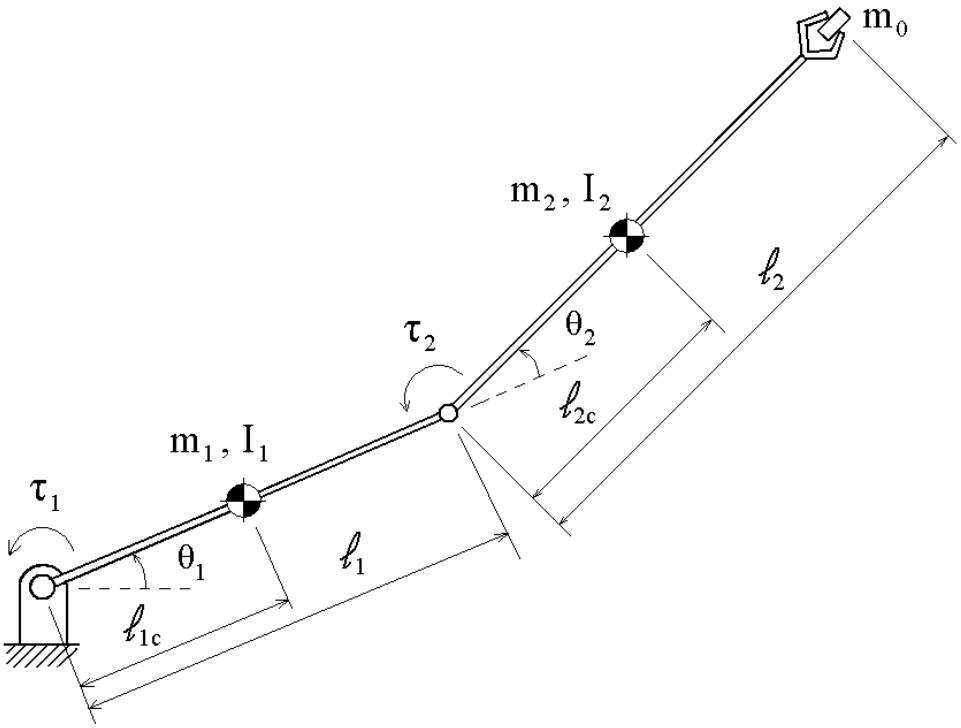

Figure 1: Parameters and variables of the unbalanced mechanism.

We assume the links of the mechanism are rigid bodies, performing planar motions parallel to the vertical plane, and therefore, subjected to gravitational forces. Friction effects on both joints and the mass moment of inertia of payload with respect to its own center of mass are neglected. The mass of the actuator that moves link 2 is included in the mass of link 1 and gripper mass is added to the mass of link 2. The equations of motion of the unbalanced mechanism can be written as:

$$\tau_1 = D_{11}\ddot{\theta}_1 + D_{12}\ddot{\theta}_2 + D_{111}\dot{\theta}_1^2 + D_{122}\dot{\theta}_2^2 + D_{112}\dot{\theta}_1\dot{\theta}_2 + D_{121}\dot{\theta}_2\dot{\theta}_1 + D_1 \tag{1}$$

$$\tau_2 = D_{21}\ddot{\theta}_1 + D_{22}\ddot{\theta}_2 + D_{211}\dot{\theta}_1^2 + D_{222}\dot{\theta}_2^2 + D_{212}\dot{\theta}_1\dot{\theta}_2 + D_{221}\dot{\theta}_2\dot{\theta}_1 + D_2 \tag{2}$$

where the coefficients of kinematic variables and gravitational terms are:

$$D_{11} = m_1\ell_{1c}^2 + I_1 + m_2(\ell_1^2 + \ell_{2c}^2) + I_2 + m_0(\ell_1^2 + \ell_2^2) + 2\ell_1\cos\theta_2(m_2\ell_{2c} + m_0\ell_2) \tag{3}$$

$$D_{12} = m_2\ell_{2c}^2 + I_2 + m_0\ell_2^2 + \ell_1\cos\theta_2(m_2\ell_{2c} + m_0\ell_2) \tag{4}$$

$$D_{111} = 0 \tag{5}$$

$$D_{112} = D_{121} = -\ell_1\sin\theta_2(m_2\ell_{2c} + m_0\ell_2) \tag{6}$$

$$D_{122} = D_{112} \tag{7}$$

$$D_1 = g\cos\theta_1(m_0\ell_1 + m_1\ell_{1c} + m_2\ell_1) + g\cos(\theta_1 + \theta_2)(m_2\ell_{2c} + m_0\ell_2) \tag{8}$$

$$D_{21} = D_{12} \tag{9}$$

$$D_{22} = m_2\ell_{2c}^2 + I_2 + m_0\ell_2^2 \tag{10}$$

$$D_{211} = \ell_1\sin\theta_2(m_2\ell_{2c} + m_0\ell_2) \tag{11}$$

$$D_{222} = 0 \tag{12}$$

$$D_{212} = D_{221} = 0 \tag{13}$$

$$D_2 = g\cos(\theta_1 + \theta_2)(m_2\ell_{2c} + m_0\ell_2) \tag{14}$$

2.1 Static Balancing

Adaptive Balancing is a technique that modifies the original kinematic chain of unbalanced mechanisms in such a way to obtain static balancing, complete decoupling of dynamic equations and annulling the reactive moment at base. In order to ensure static balancing, we adopt here the procedure first proposed by Chung et al. [3]. It consists of adding two movable compensation inertias m_{1B} e m_{2B} to links 1 and 2, respectively. These inertias eliminate not only gravity torques due to masses of links 1 and 2, but also to the presence of payload m_0. Each of these movable inertias is connected to its respective link by means of a prismatic joint and changes its position according to changes on payload values (Figure2(a),2(b)). Constructively, we can implement this feature using a force transducer that measures the payload weight and feedbacks acquired signals to two additional actuators that move compensation inertias. Despite of this procedure being successful on removing most of the terms from the dynamic equations, both mentioned equations remain coupled. They still show terms due to cross inertia.

2.2 Decoupling the dynamic equations

To eliminate those terms due to cross inertia and annul reactive moment acting on the base (see also section 2.3) as well, two steps are necessary. First, a rotor is added to the kinematic chain and connected to link 1 by a revolute joint. This rotor is geared to link 2 and rotates in opposite direction with respect to this link. The mass of the rotor remains unchanged, but its mass moment of inertia may be altered by moving the radial position of two other compensation inertias connected to it by prismatic joints, whose values are $m_{2I}/2$. The second step is similar to the first one and we can implement it by adding a second rotor connected to the base and geared to link 1. Two other compensation inertias, whose values are $m_{1I}/2$, can be added and connected to this rotor by prismatic joints, working the same way as the previous two ones with the first rotor.

Constructively, these rotors can be helical gears or pulleys conveniently coupled to their respective links. Compensation inertias can be positioned by means of two additional actuators working similarly as the previous ones for static balancing. In the general case, the coefficients of kinematic variables and gravitational terms of equations (1) and (2) are:

$$\begin{aligned} D_{11} = {} & m_1\ell_{1c}^2 + I_1 + m_2(\ell_1^2 + \ell_{2c}^2) + I_2 + m_0(\ell_1^2 + \ell_2^2) + m_{2B}(\ell_1^2 + \ell_{2B}^2) + m_{1B}\ell_{1B}^2 \\ & + 2\ell_1 \cos\theta_2(m_2\ell_{2c} + m_0\ell_2 - m_{2B}\ell_{2B}) + m_{1I}\ell_{1I}^2 r_T^2 + m_{2I}(\ell_{12B}^2 + \ell_{2I}^2) \end{aligned} \tag{15}$$

$$D_{12} = m_2\ell_{2c}^2 + I_2 + m_0\ell_2^2 + m_{2B}\ell_{2B}^2 + \ell_1 \cos\theta_2(m_2\ell_{2c} + m_0\ell_2 - m_{2B}\ell_{2B}) - m_{2I}\ell_{2I}^2 r_T \tag{16}$$

$$D_{111} = 0 \tag{17}$$

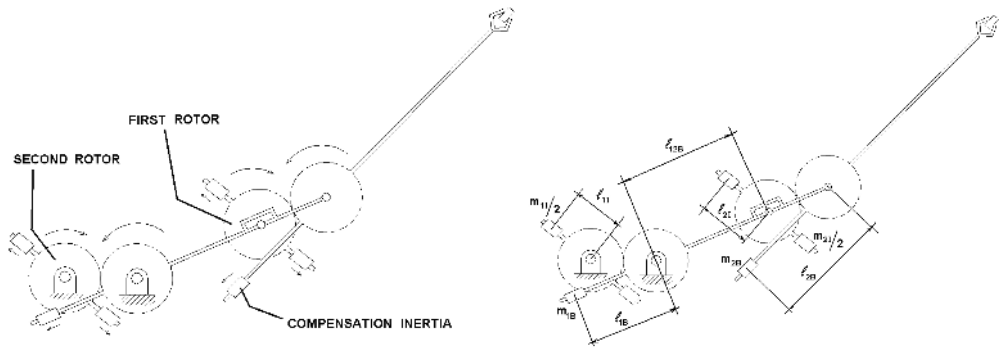

(a) (b)

Figure 2: (a) Mechanism adaptively and completely balanced; (b) Parameters and variables of the balanced mechanism.

$$D_{112} = D_{121} = -\ell_1 \sin\theta_2 (m_2 \ell_{2c} + m_0 \ell_2 - m_{2B} \ell_{2B}) \tag{18}$$

$$D_{122} = D_{112} \tag{19}$$

$$\begin{aligned} D_1 = {} & g \cos\theta_1 (m_0 \ell_1 + m_{2I} \ell_{12B} + m_1 \ell_{1c} + m_2 \ell_1 - m_{1B} \ell_{1B} + m_{2B} \ell_1) \\ & + g \cos(\theta_1 + \theta_2)(m_2 \ell_{2c} + m_0 \ell_2 - m_{2B} \ell_{2B}) \end{aligned} \tag{20}$$

$$D_{21} = D_{12} \tag{21}$$

$$D_{22} = m_2 \ell_{2c}^2 + I_2 + m_0 \ell_2^2 + m_{2B} \ell_{2B}^2 + m_{2I} \ell_{2I}^2 r_T^2 \tag{22}$$

$$D_{211} = \ell_1 \sin\theta_2 (m_2 \ell_{2c} + m_0 \ell_2 - m_{2B} \ell_{2B}) \tag{23}$$

$$D_{222} = 0 \tag{24}$$

$$D_{212} = D_{221} = 0 \tag{25}$$

$$D_2 = g \cos(\theta_1 + \theta_2)(m_2 \ell_{2c} + m_0 \ell_2 - m_{2B} \ell_{2B}) \tag{26}$$

where ℓ_{12B} is the distance between the center of the revolute joint that connects the first rotor to link 1 and the center of revolute joint that connects link 1 to the base; ℓ_{2I} is the position

of both compensation masses $m_{2I}/2$ with respect to the center of revolute joint that connects the first rotor to link 1; ℓ_{1I} is the position of both compensation masses $m_{1I}/2$ with respect to the center of revolute joint that connects the second rotor to the base (Figure2(b)); and r_T is the transmission ratio. For the sake of clearness, gear masses are not explicitly included in presented equations.

We can choose compensation inertias values and their relative positions in such a way to make null those terms due to cross inertia. Consequently, both dynamic equations will become decoupled. The four conditions for the adaptive balancing are:

$$m_2\ell_{2c} + m_0\ell_2 - m_{2B}\ell_{2B} = 0 \tag{27}$$

$$m_0\ell_1 + m_{2I}\ell_{12B} + m_1\ell_{1c} + m_2\ell_1 - m_{1B}\ell_{1B} + m_{2B}\ell_1 = 0 \tag{28}$$

$$m_2\ell_{2c}^2 + I_2 + m_0\ell_2^2 + m_{2B}\ell_{2B}^2 + \ell_1\cos\theta_2(m_2\ell_{2c} + m_0\ell_2 - m_{2B}\ell_{2B}) - m_{2I}\ell_{2I}^2 r_T = 0 \tag{29}$$

$$\begin{aligned} m_1\ell_{1c}^2 + I_1 + m_2(\ell_1^2 + \ell_{2c}^2) + I_2 + m_0(\ell_1^2 + \ell_2^2) + m_{2B}(\ell_1^2 + \ell_{2B}^2) + m_{1B}\ell_{1B}^2 \\ + 2\ell_1\cos\theta_2(m_2\ell_{2c} + m_0\ell_2 - m_{2B}\ell_{2B}) - m_{1I}\ell_{1I}^2 r_T + m_{2I}(\ell_{12B}^2 + \ell_{2I}^2) = 0 \end{aligned} \tag{30}$$

Substituting the calculated compensation inertias from the previous conditions, the coefficients of kinematic variables and gravitational terms become:

$$D_{11} = m_{1I}\ell_{1I}^2 r_T(1 + r_T) \tag{31}$$

$$D_{12} = 0 \tag{32}$$

$$D_{111} = 0 \tag{33}$$

$$D_{112} = D_{121} = 0 \tag{34}$$

$$D_{122} = D_{112} \tag{35}$$

$$D_1 = 0 \tag{36}$$

$$D_{21} = D_{12} \tag{37}$$

$$D_{22} = m_{2I}\ell_{2I}^2 r_T(1 + r_T) \tag{38}$$

$$D_{211} = 0 \tag{39}$$

$$D_{222} = 0 \tag{40}$$

$$D_{212} = D_{221} = 0 \tag{41}$$

$$D_2 = 0 \tag{42}$$

In order to improve the feasibility of the proposed method, we can alter the positions of actuators. The shaft of second actuator may be connected to the first rotor shaft instead of being directly coupled to link 2. Analogously, we may connect the shaft of first actuator to the second rotor shaft. Hence with these modifications the dynamic equations are:

$$\tau_1 = -m_{1I}\ell_{1I}^2(1 + r_T)\ddot{\theta}_1 \tag{43}$$

$$\tau_2 = -m_{2I}\ell_{2I}^2(1 + r_T)\ddot{\theta}_2 \tag{44}$$

2.3 Annulling reactive moment at base

For an unbalanced mechanism, the reactive moment $\left(\vec{M}_{O_1}\right)_{base}$ acting on the base, with respect to pole O_1 (Figure3(a)), corresponds to the negative value of driving torque τ_1. This reactive moment can be determined by calculating the time derivative of the angular momentum of the whole system. For a mechanism balanced according to the adaptive method, we can develop the expression of the angular momentum $\vec{H}_{O_1}$ with respect to a pole O_1,

$$\vec{H}_{O_1} = (\vec{H}_{O_1})_{link1} + (\vec{H}_{O_1})_{link2} + (\vec{H}_{O_1})_{rotor1} + (\vec{H}_{O_1})_{rotor2} \tag{45}$$

For link1,

$$(\vec{H}_{O_1})_{link1} = (m_1\ell_{1c}^2 + I_1 + m_{1B}\ell_{1B}^2)\dot{\theta}_1\vec{k} \tag{46}$$

For link2,

$$(\vec{H}_{O_1})_{link2} = (\vec{H}_{O_2})_{link2} + (O_2 - O_1) \wedge (m_2 + m_o + m_{2B})\vec{v}_{O_2} \tag{47}$$

$$(\vec{H}_{O_2})_{link2} = (m_2\ell_{2c}^2 + m_0\ell_2^2 + I_2 + m_{2B}\ell_{2B}^2)(\dot{\theta}_1 + \dot{\theta}_2)\vec{k} \tag{48}$$

$$(O_2 - O_1) = \ell_1(\cos\theta_1\vec{i} + sen\theta_1\vec{j}) \tag{49}$$

$$\vec{v}_{O_2} = \ell_1\dot{\theta}_1(-sen\theta_1\,\vec{i} + \cos\theta_1\vec{j}) \tag{50}$$

$$(\vec{H}_{O_1})_{link2} = (m_2\ell_{2c}^2 + m_0\ell_2^2 + I_2 + m_{2B}\ell_{2B}^2)(\dot{\theta}_1 + \dot{\theta}_2)\vec{k} + (m_2 + m_o + m_{2B})\ell_1^2\dot{\theta}_1\vec{k} \tag{51}$$

For the first rotor,

$$(\vec{H}_{O_1})_{rotor1} = (\vec{H}_{O_3})_{rotor1} + (O_3 - O_1) \wedge m_{2I}\vec{v}_{O_3} \tag{52}$$

$$(\vec{H}_{O_3})_{rotor1} = m_{2I}\ell_{2I}^2(\dot{\theta}_1 - r_T\dot{\theta}_2)\vec{k} \tag{53}$$

$$(O_3 - O_1) = \ell_{12B}(\cos\theta_1\,\vec{i} + sen\theta_1\,\vec{j}) \tag{54}$$

$$\vec{v}_{O_3} = \ell_{12B}\dot{\theta}_1(-sen\theta_1\,\vec{i} + \cos\theta_1\vec{j}) \tag{55}$$

$$(\vec{H}_{O_1})_{rotor1} = m_{2I}\ell_{2I}^2(\dot{\theta}_1 - r_T\dot{\theta}_2)\vec{k} + m_{2I}\ell_{12B}^2\dot{\theta}_1\vec{k} \tag{56}$$

For the second rotor,

$$(\vec{H}_{O_1})_{rotor2} = (\vec{H}_{O_4})_{rotor2} + (O_4 - O_1) \wedge m_{1I}\vec{v}_{O_4} \tag{57}$$

$$(\vec{H}_{O_4})_{rotor2} = m_{1I}\ell_{1I}^2(-r_T\dot{\theta}_1)\vec{k} \tag{58}$$

$$\vec{v}_{O_4} = \vec{0} \tag{59}$$

Therefore,

$$\begin{aligned}\vec{H}_{O_1} = {} & \left[m_1\ell_{1c}^2 + I_1 + m_2(\ell_1^2 + \ell_{2c}^2) + I_2 + m_0(\ell_1^2 + \ell_2^2) + m_{2B}(\ell_1^2 + \ell_{2B}^2)\right. \\ & \left. + m_{1B}\ell_{1B}^2 - m_{1I}\ell_{1I}^2 r_T + m_{2I}(\ell_{12B}^2 + \ell_{2I}^2)\right]\dot{\theta}_1\vec{k} \\ & + \left(m_2\ell_{2c}^2 + I_2 + m_0\ell_2^2 + m_{2B}\ell_{2B}^2 - m_{2I}\ell_{2I}^2 r_T\right)\dot{\theta}_2.\vec{k}\end{aligned} \tag{60}$$

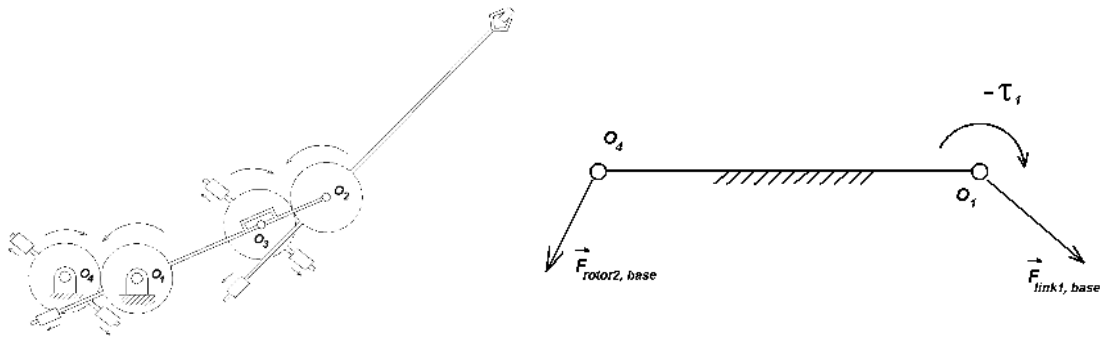

(a) (b)

Figure 3: (a) Used poles for calculating angular momentum; (b) Forces and torque acting on the base.

Reactive moment acting on the base is equal to the time derivative of the angular momentum and also depends on $\tau_1$and moments of the forces $\vec{F}_{rotor2,base}$,$\vec{F}_{link1,base}$, which are reactive forces of the second rotor and link 1(Figure3(b)), respectively, acting on the base:

$$\frac{d\vec{H}_{O_1}}{dt} = \left(\vec{M}_{O_1}\right)_{base} = (O_4 - O_1) \wedge \vec{F}_{rotor2,base} + (O_1 - O_1) \wedge \vec{F}_{link1,base} - \tau_1 \vec{k} \tag{61}$$

$$\begin{aligned} \left(\vec{M}_{O_1}\right)_{base} = & [\, m_1 \ell_{1c}^2 + I_1 + m_2(\ell_1^2 + \ell_{2c}^2) + I_2 + m_0(\ell_1^2 + \ell_2^2) + m_{1B}\ell_{1B}^2 \\ & + m_{2B}(\ell_1^2 + \ell_{2B}^2) - m_{1I}\ell_{1I}^2 r_T + m_{2I}(\ell_{12B}^2 + \ell_{2I}^2)] \, \ddot{\theta}_1 . \vec{k} \\ & + \left(m_2 \ell_{2c}^2 + I_2 + m_0 \ell_2^2 + m_{2B}\ell_{2B}^2 - m_{2I}\ell_{2I}^2 r_T\right) \ddot{\theta}_2 . \vec{k} \end{aligned} \tag{62}$$

To cancel $\left(\vec{M}_{O_1}\right)_{base}$, it is necessary that the coefficients of $\ddot{\theta}_1$ and $\ddot{\theta}_2$ are null. These conditions are already satisfied by equations (27-30). Therefore, for the adaptively balanced mechanism, $\left(\vec{M}_{O_1}\right)_{base}$ is always a null vector.

According to what we stated before, to achieve adaptive balancing is necessary to employ six movable compensation inertias conveniently positioned into the kinematic chain of the mechanism. Otherwise, if the desired characteristics are only static balancing and complete decoupling of dynamic equations, then four compensation inertias will be enough to accomplish these tasks. The second rotor, the one that is connected to the base and geared to link 1, will be no longer needed.

3 Simulation

In order to evaluate quantitatively the dynamic behavior of a two-degree-of-freedom planar articulated open kinematic chain mechanism balanced according to adaptive method, one type

of simulation is performed. The simulation considers that gripper tip develops a straight-line path with a specified velocity profile.

We chose driving torques as valid criteria to establish a comparison between an unbalanced and an adaptively balanced mechanism. Table 1 includes both geometric and dynamic parameters of the unbalanced mechanism. Transmission ratio and compensation inertia values are shown on table 2, and table 3 presents corresponding positions of compensation inertias on the kinematic chain.

Table 1: Geometric and dynamic parameters

Link 1				Link 2				Payload
ℓ_1 (m)	ℓ_{1c} (m)	m_1 (kg)	I_1 $(kg.m^2)$	ℓ_2 (m)	ℓ_{2c} (m)	m_2 (kg)	I_2 $(kg.m^2)$	m_0 (kg)
0.5	0.25	12	0.25	0.5	0.25	6	0.125	4

Table 2: Compensation inertias and transmission ratio.

m_{1B}(kg)	m_{2B}(kg)	m_{1I} (kg)	m_{2I} (kg)	r_T
45	15	46	32.5	2

The motion characteristics of the straight-line path developed by the gripper tip are shown on table 4. The velocity profile has a trapezoidal shape and we assume that each motion phase lasts the same time. The behavior of kinematic and dynamic variables during motion cycle is presented on figure 4.

Table 3: Positions of compensation inertias.

	for m_0=0kg	for m_0=4kg
$\ell_{1B}(m)$	0.25	0.34
$\ell_{2B}(m)$	0.25	0.23
$\ell_{1I}(m)$	0.25	0.42
$\ell_{2I}(m)$	0.25	0.19
$\ell_{12B}(m)$	0	0

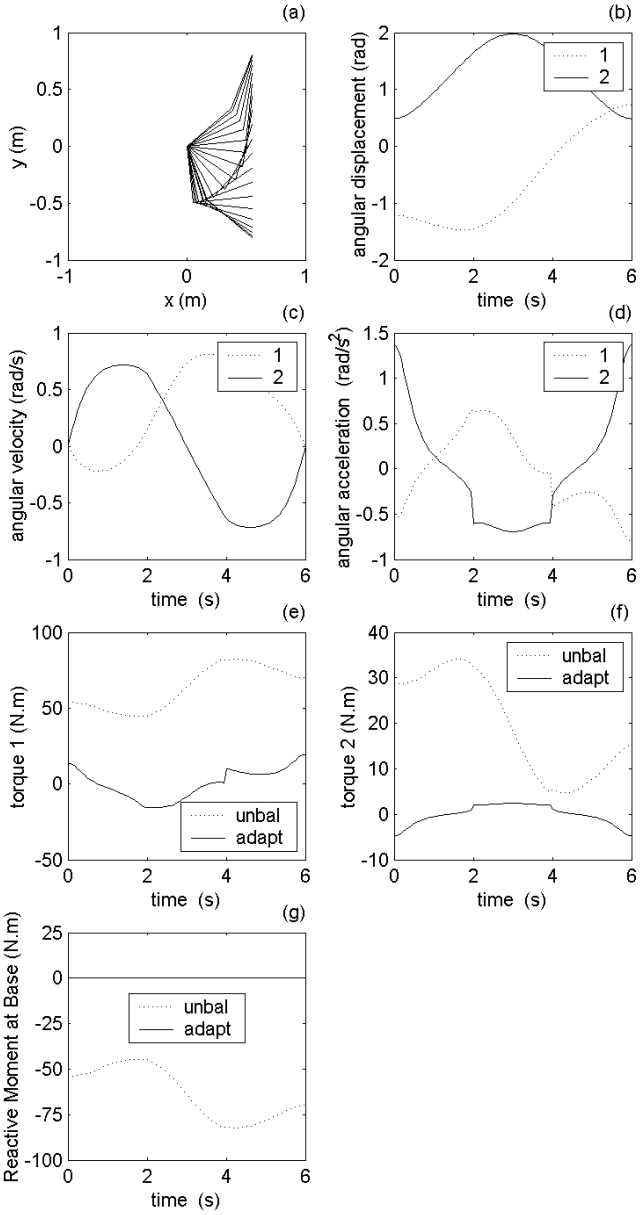

Figure 4: Straight-line path of the gripper tip: (a) Mechanism configurations during its motion; (b) angular displacements; (c) angular velocities; (d) angular accelerations; (e) driving torque of the first actuator; (f) driving torque of the second actuator;(g) reactive moment at base.

Table 4: Parameters for straight-line path

Initial point		Terminal point		Duration	a_{max}	v_{max}
$x(m)$	$y(m)$	$x(m)$	$y(m)$	(s)	(m/s^2)	(m/s)
0.55	-0.8	0.55	0.8	6	0.2	0.4

4 Conclusions

Adaptive balancing is a technique that accomplishes many improvements to the dynamic behavior of two degree-of-freedom planar articulated open-loop mechanisms. One important contribution is that total decoupling of dynamic equations is possible. So, differently from previously published works that propose partial decoupling, this method really eliminates from equations those torques due to gravitational, centripetal, Coriolis forces, and cross inertia terms as well, without neglecting them. Therefore, we can control each actuator independently, which really simplifies the control of the system as a whole. The method also annuls reaction moment acting on the base, which can be a very convenient feature that avoids vibration transmission from the moving links to their base or locomotion platform. Besides, adaptive balancing considers the payload presence and its eventual change in different operations.

Performed simulation considered a straight-line path of the gripper tip. For this trajectory, an adaptively balanced mechanism presented lower driving torques (Figures 4(e) and 4(f)) than a kinematically identical but unbalanced mechanism. Due to chosen velocity profile, Figures 4.b and 4.c present two transitions separating three motion phases. If specified motions for the gripper tip result in extremely high angular accelerations, then driving torques of an adaptively balanced mechanism will be strongly affected and their values will increase accordingly. This predictable and undesirable consequence can be minimized by adopting a transmission ratio more than 1, which will decrease driving torques, make compensation inertias have more feasible values, despite overall driving power increases. The figure 5 shows a possible architecture for the mechanism after making the necessary modifications required for the adaptive balancing.

Future works will be concentrated on the generalization of the adaptive balancing to any kind of open-loop mechanism, planar or spatial, with different joints. Such a balancing should be achieved under the presence of perturbation forces of different natures, not only due to payload weight, but also generated when robot gripper holds a workpiece (machining forces).

Acknowledgments: This work was supported in part by a Research Fellowship from CNPq, Conselho Nacional de Desenvolvimento Científico e Tecnológico, Brazil.

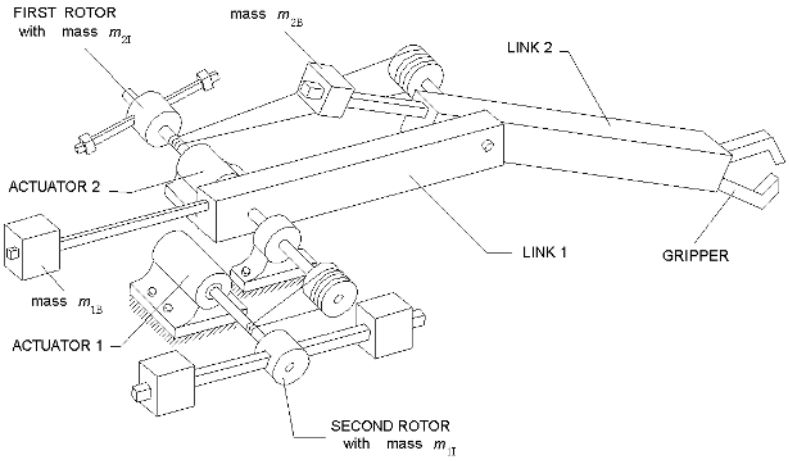

Figure 5: Possible architecture for the mechanism balanced according to the proposed method.

References

[1] H. Asada and K. Youcef-Toumi. Direct-Drive Robots-Theory and Practice. MIT Press, 1987.

[2] R. S. Berkof. Complete force and moment balancing of inline four-bar linkage. Mechanism And Machine Theory, 8(3):397–410, 1973.

[3] W. K. Chung, H. S. Cho, and C. W. Lee. Performance of Robotic Manipulators With An Automatic Balancing Mechanism. ASME PED-13, 1984.

[4] F. Ciparrone. A dynamic simulator for open kinematic chain robot manipulators. Master's thesis, University of Sao Paulo, 1991.

[5] H. Diken. Effect of mass balancing on the actuator torques of a manipulator. Mechanism And Machine Theory, 30(4):495–500, 1995.

[6] H. Diken. Trajectory control of mass balanced manipulators. Mechanism and Machine Theory, 32(3):313–322, 1997.

[7] I. S. Kochev. General theory of complete shaking moment balancing of planar linkages: a critical review. Mechanism And Machine Theory, 35(11):1501–1514, 2000.

[8] M. Kolarski, M. Vukobratovic, and B. Borovac. Dynamic analysis of balanced robot mechanisms. Mechanism And Machine Theory, 29(3):427–454, 1994.

[9] S. Megahed. Contribution a la modélisation géométrique et dynamique des robots manipulateurs à structure de chaîne cinématique simple ou complexe. application a leur commande. Master's thesis, Université Paul Sabatier, 1984.

[10] R. Paul. Robot manipulators: mathematics, programming and control. M.I.T. Press, 1981.

[11] E. I. Rivin. Mechanical Design of Robots. McGraw-Hill, 1988.