10(2013) 891 – 919



Analysis of laminated composite skew shells using higher order shear deformation theory

Abstract

Static analysis of skew composite shells is presented by developing a C_0 finite element (FE) model based on higher order shear deformation theory (HSDT). In this theory the transverse shear stresses are taken as zero at the shell top and bottom. A realistic parabolic variation of transverse shear strains through the shell thickness is assumed and the use of shear correction factor is avoided. Sander's approximations are considered to include the effect of three curvature terms in the strain components of composite shells. The C_0 finite element formulation has been done quite efficiently to overcome the problem of C_1 continuity associated with the HSDT. The isoparametric FE used in the present model consists of nine nodes with seven nodal unknowns per node. Since there is no result available in the literature on the problem of skew composite shell based on HSDT, present results are validated with few results available on composite plates/shells. Many new results are presented on the static response of laminated composite skew shells considering different geometry, boundary conditions, ply orientation, loadings and skew angles. Shell forms considered in this study include spherical, conical, cylindrical and hypar shells.

Keywords

skew shell, composite, higher order shear deformation theory, cylindrical, hypar, finite element method

Ajay Kumar*, Anupam Chakrabarti and Mrunal Ketkar

Department of Civil Engineering, Indian Institute of Technology, Roorkee-247 667, India
Phone: +91(1332)285844,
Fax.: +91(1332)275568

Received 14Jun 2012
In revised form 09 Oct 2012

*Author email: sajaydce@gmail.com

1 INTRODUCTION

Laminated composite shell structures are widely used in civil, mechanical, aerospace and other engineering applications. Laminated composites materials are becoming popular because of their high strength to weight and strength to stiffness ratios. The most important feature for the analysis of composite structures is that the material (composite) is weak in shear compared to extensional rigidity. Due to this reason transverse shear deformation of the composite shell has to be modeled very efficiently.

Nomenclature

a = Length of the mappedshell panel parallel to x-axis in plan

α = Angle between skewed edge of mapped shell panel with respect to y-axis measured in plan

b = Width of the mapped shell panel parallel to y-axis in plan

h = Total height of the shell panel

N x N = FE mesh divison denoted as (Number of divisions in X-direction) x (Number of divisions in Y-direction).

L = Total number of layers in a lamination scheme

S = Ratio of length to total height of shell panel (a/h)

Classical theories originally developed for thin elastic shells are based on the Love- Kirchhoff assumptions. These theories neglect the effect of transverse shear deformations. However, application of such theories to laminated composite shells where shear deformation is very significant, may lead to errors in calculating deflections, stresses and frequencies.

In subsequent development of shell theories transverse shear deformation was included in a manner where the shear strain is uniform throughout the thickness of the shell. These theories are known as first order shear deformation theory (FSDT). In this theory a shear correction factors are required for the analysis and these factors should be calculated based on the orientations of different layers in different directions.

The effects of transverse shear and normal stresses in shells were considered by Hildebrand, Reissner and Thomas [18], Lure [25], and Reissner [35]. The effect of transverse shear deformation and transverse isotropy, as well as thermal expansion through the thickness of cylindrical shells were considered by Gulati and Essenberg [16], Zukas and Vinson [43], Dong et al. [12, 13], Hsu and Wang [19], and Whitney and Sun [37, 38]. The higher-order shell theories presented in [37, 38] are based on a displacement field in which the displacements in the surface of the shell are expanded as linear functions of the thickness coordinate and the transverse displacement is expanded as a quadratic function of the thickness coordinate. These higher-order shell theories are cumbersome and computationally more demanding, because, with each additional power of the thickness co-ordinates, an additional dependent unknown is introduced into the theory.

Reddy and Liu [33] presented a simple higher-order shear deformation theory (HSDT) for the analysis of laminated shells. It contains the same dependent unknowns as in the first-order shear deformation theory (FSDT) in which the displacements of the middle surface are expanded as linear functions of the thickness coordinate and the transverse deflection is assumed to be constant through the thickness. The theory is based on a displacement field in which the displacements of the middle surface are expanded as cubic functions of the thickness coordinate and the transverse displacement is assumed to be constant through the thickness. The additional dependent unknowns introduced with the quadratic and cubic powers of the thickness coordinate are evaluated in terms of the derivatives of the transverse displacement and the rotations of the normals at the middle surface. This displacement field leads to the parabolic distribution of the transverse shear stresses (and zero transverse normal strain) and therefore no shear correction factors are used. Huang [20] presented modified Reddy's theory and further improved the accuracy. Xiao-ping [39] presented a shell theory based on Love's first-order geometric approximation and Donnell's simplification for shallow shells. The theory improves the in-plane displacement (u, v) distribution through thickness by ensuring the continuity of interlaminar transverse shear stresses and zero transverse shear strains on the surface. The theory contains then same dependent unknown and the same order of governing equations as in the first-order shear deformation theory. Without the need for shear correction factors, the theory predicts more accurate responses than first-order theory and some higher-order theories, and the solutions are very close to the elasticity solutions. However, these theories [33, 39] demand C1 continuity of transverse displacements during finite element implementations.

Yang [41] developed a higher-order shell element with three constant radii of curvature, two principal radii, orthogonal to each other and one twist radius. The displacement functions u, v and w are composed of products of one-dimensional Hermite interpolation formulae. Shu and Sun [40]

developed an improved higher-order theory for laminated composite plates. This theory satisfies the stress continuity across each layer interface and also includes the influence of different materials and ply-up patterns on the displacement field. Liew and Lim [24] proposed a higher-order theory by considering the Lame´ parameter (1+z/Rx) and (1+z/Ry) for the transverse strains, which were neglected by Reddy and Liu [33]. This theory accounts for cubic distribution (non-even terms) of the transverse shear strains through the shell thickness in contrast with the parabolic shear distribution (even-terms) of Reddy and Liu [33]. Kant and Khare [21] presented a higher-order facet quadrilateral composite shell element. Bhimaraddi [4], Mallikarjuna and Kant [26], Cho et al. [8] are among the others to develop higher-order shear deformable shell theory. It is observed that except for the theory of Yang [41], remaining higher-order theories do not account for twist curvature (1/Rxy), which is essential while analyzing shell forms like hypar and conoid shells.

Analyses of composite shell panels were carried out by many researchers [1, 4, 6, 7, 9, 14, 15, 22, 24, 27, 29, 30, 33 and 36] in the past few decades mainly based on FSDT.

However, application of higher-order theory for studying the behavior of laminated composite shells with the combination of all three radii of curvature is very limited in literature. Pradyumna and Bandyopadhyay [31] studied the behavior of laminated composite shells based on a higher-order shear deformation theory (HSDT) developed by Kant and Khare [21]. They also [21] also extended the theory to the shells to include all three radii of curvature. However, this theory [21] contains some nodal unknowns which are not having any physical significance and therefore, incorporation of appropriate boundary conditions becomes a problem.

It is also observed that there is no literature available on the analysis of composite skew shell using HSDT while very few publications are available on the problem using FSDT [17] for isotropic materials only.

In view of the above, a new finite element model has been developed in the present study for static analysis of composite skew shell panels using a simple higher order shear deformation theory [33]. The problem of C1 continuity associated with theory has been overcome in this model and an existing C0 isoparametric finite element has been utilized for this purpose. The element contains nine nodes with seven nodal unknowns at each node. The analysis has been performed considering shallow shell assumptions. The effect of all the three radii of curvature is also included in the formulation. The present finite element model based on HSDT is applied to solve many problems of composite skew shells considering different shell geometries, boundary conditions, loadings and other parameters. The present results are also validated with some published results.

2 THEORY AND FORMULATION

A laminated shell element made of a finite number of uniformly thick orthotropic layers oriented arbitrarily with respect to the shell co-ordinates (x, y, z) is shown in Figure 1. The reference plane (i.e., mid plane) is defined at at z = 0.

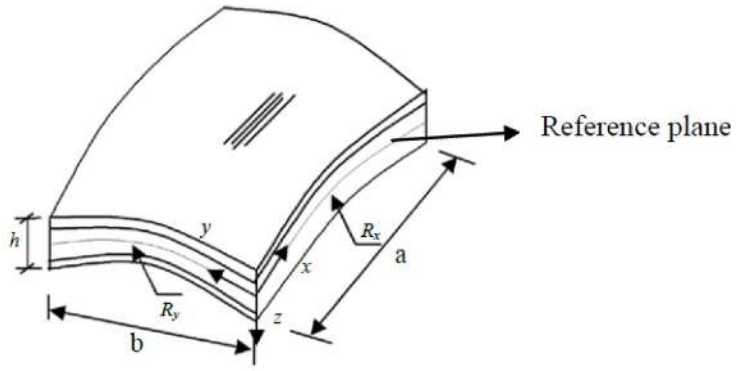

Figure 1 Laminated composite doubly curved shell element

In the present formulation the in-plane displacement components u (x, y, z) and v (x, y, z) at any point in the shell space are expanded in Taylor's series in terms of the thickness co- ordinates while the transverse displacement, w(x, y) is taken as constant throughout the shell thickness. As the transverse shear stresses actually vary parabolically through the shell thickness the in-plane displacement fields are expanded as cubic functions of the thickness co-ordinate. The displacement fields are assumed in the form as given by Reddy [32] which satisfy the abovecriteria and may be expressed as below:

$$\begin{aligned} u(x, y, z) &= u\ (x, y) + z\vartheta\ (x, y) + z^2\xi\ (x, y) + z^3\zeta\ \ (x, y) \\ v(x, y, z) &= v\ (x, y) + z\vartheta\ (x, y) + z^2\xi\ (x, y) + z^3\zeta\ \ (x, y) \\ w(x, y) &= w_0\ (x, y) \end{aligned} \tag{1}$$

where u, v and w are the displacements of a general point (x, y, z) in an element of the laminate along x, y and z directions, respectively. The parameters u_0, v_0, and w_0 denote the displacements of a point (x ,y) on the mid plane, and and are the rotations of normals with respect to the mid plane about the y and x axes, respectively. The functions ξ_x ,ζ_x , ξ_y and ζ_y can be determined using the conditions that the transverse shear strains, γ_{xz} and γ_{yz} vanish at the top and bottom surfaces of the shell. We have

$$\begin{aligned} \gamma_{xz} &= \frac{\partial u}{\partial z} + \frac{\partial w}{\partial x} = \theta_x + 2z\xi_x + 3z^2\zeta_x + \frac{\partial w}{\partial x} \\ \gamma_{yz} &= \frac{\partial v}{\partial z} + \frac{\partial w}{\partial y} = \theta_y + 2z\xi_y + 3z^2\zeta_y + \frac{\partial w}{\partial y} \end{aligned} \tag{2}$$

Setting $\gamma_{xz}(x,y,\pm\frac{h}{2})$ and $\gamma_{yz}(x,y,\pm\frac{h}{2})$ to zero, we obtain

$$\xi_x = 0, \quad \xi_y = 0$$

$$\zeta_x = -\frac{4}{3h^2}(\theta_x + \frac{\partial w}{\partial x}), \quad \zeta_y = -\frac{4}{3h^2}(\theta_y + \frac{\partial w}{\partial y}) \tag{3}$$

The displacement field in equation (1) becomes

$$u = u_0 + z\theta_x(1-\frac{4z^2}{3h^2}) - \frac{4z^3}{3h^2}(\frac{\partial w}{\partial x}) = u_0 + z\theta_x(1-\frac{4z^2}{3h^2}) - \frac{4z^3}{3h^2}\psi_x^*$$

$$v = v_0 + z\theta_y(1-\frac{4z^2}{3h^2}) - \frac{4z^3}{3h^2}(\frac{\partial w}{\partial y}) = v_0 + z\theta_y(1-\frac{4z^2}{3h^2}) - \frac{4z^3}{3h^2}\psi_y^* \tag{4}$$

$$w = w_0$$

The linear strain-displacement relations according to Sanders' approximation are:

$$\varepsilon_x = \frac{\partial u}{\partial x} + \frac{w}{R_x}, \quad \varepsilon_y = \frac{\partial v}{\partial y} + \frac{w}{R_y}, \gamma_{xy} = \frac{\partial v}{\partial x} + \frac{\partial u}{\partial y} + \frac{2w}{R_{xy}}$$

$$\gamma_{xz} = \frac{\partial u}{\partial z} + \frac{\partial w}{\partial x} - A_1\frac{u}{R_x} - A_1\frac{v}{R_{xy}} \quad \gamma_{yz} = \frac{\partial v}{\partial z} + \frac{\partial w}{\partial y} - A_1\frac{v}{R_y} - A_1\frac{u}{R_{xy}} \tag{5}$$

Substituting equation (4) in equation (5):

$$\varepsilon_x = \varepsilon_{x0} + zK_x(1-\frac{4z^2}{3h^2}) - \frac{4z^3}{3h^2}K_x^*$$

$$\varepsilon_y = \varepsilon_{y0} + zK_y(1-\frac{4z^2}{3h^2}) - \frac{4z^3}{3h^2}K_y^*$$

$$\gamma_{xy} = \gamma_{xy0} + zK_{xy}(1-\frac{4z^2}{3h^2}) - \frac{4z^3}{3h^2}K_{xy}^* \tag{6}$$

$$\gamma_{xz} = \phi_x + zK_{xz}(1-\frac{4z^2}{3h^2}) - \frac{4z^3}{3h^2}K_{xz}^* - \frac{4z^3}{3h^2}K_{xz}^{**}$$

$$\gamma_{yz} = \phi_y + zK_{yz}(1-\frac{4z^2}{3h^2}) - \frac{4z^3}{3h^2}K_{yz}^* - \frac{4z^3}{3h^2}K_{yz}^{**}$$

where,

$$\left\{\varepsilon_{x0},\varepsilon_{y0},\gamma_{xy0}\right\}=\left\{\frac{\partial u_0}{\partial x}+\frac{w_0}{R_x},\frac{\partial v_0}{\partial y}+\frac{w_0}{R_y},\frac{\partial u_0}{\partial y}+\frac{\partial v_0}{\partial x}+\frac{2w_0}{R_{xy}}\right\}$$

$$\left\{\phi_x,\phi_y\right\}=\left\{\frac{\partial w}{\partial x}+\theta_x-A_1\frac{u_0}{R_x}-A_1\frac{v_0}{R_{xy}},\frac{\partial w}{\partial y}+\theta_y-A_1\frac{v_0}{R_y}-A_1\frac{u_0}{R_{xy}}\right\}$$

$$\left\{K_x,K_y,K_{xy},K_x^*,K_y^*,K_{xy}^*\right\}=\left\{\frac{\partial\theta_x}{\partial x},\frac{\partial\theta_y}{\partial y},\frac{\partial\theta_x}{\partial y}+\frac{\partial\theta_y}{\partial x},\frac{\partial\psi_x^*}{\partial x},\frac{\partial\psi_y^*}{\partial y},\frac{\partial\psi_x^*}{\partial y}+\frac{\partial\psi_y^*}{\partial x}\right\} \tag{7}$$

$$\left\{K_{xz},K_{yz},K_{xz}^*,K_{yz}^*\right\}=\left\{-A_1\frac{\theta_x}{R_x}-A_1\frac{\theta_y}{R_{xy}},-A_1\frac{\theta_y}{R_y}-A_1\frac{\theta_x}{R_{xy}},-A_1\frac{\psi_x^*}{R_x}-A_1\frac{\psi_y^*}{R_{xy}},-A_1\frac{\psi_y^*}{R_y}-A_1\frac{\psi_x^*}{R_{xy}}\right\}$$

$$\left\{K_{xz}^{**},K_{yz}^{**}\right\}=\left\{\theta_x+\psi_x^*,\theta_y+\psi_y^*\right\}$$

A_1 is a tracer by which the analysis can be reduced to that of shear deformable Love's first approximation. A_1 is important factor as it helps to incorporate the shear part which plays a critical role in failure analysis of composite laminates. Hence, A_1 must be chosen cautiously accordingly to shear deformation theory used to analyze the composites.

The constitutive relations for a typical lamina (k-th) with reference to the material axis may be written as:

$$\begin{Bmatrix}\sigma_1\\ \sigma_2\\ \tau_{12}\\ \tau_{13}\\ \tau_{23}\end{Bmatrix}_k=\begin{bmatrix}Q_{11}&Q_{12}&0&0&0\\ Q_{12}&Q_{22}&0&0&0\\ 0&0&Q_{66}&0&0\\ 0&0&0&Q_{44}&0\\ 0&0&0&0&Q_{55}\end{bmatrix}_k\begin{Bmatrix}\varepsilon_1\\ \varepsilon_2\\ \gamma_{12}\\ \gamma_{13}\\ \gamma_{23}\end{Bmatrix}_k \tag{8}$$

or, in matrix form:

$$\{\sigma\}_k=[Q]_k\{\varepsilon\}_k$$

where, $Q_{11} = E_1 / 1\text{-}\nu_{12}\,\nu_{21}$, $Q_{12} = \nu_{12}\,E_2 / 1\text{-}\nu_{12}\,\nu_{21}$, $Q_{22} = E_2 / 1\text{-}\nu_{12}\,\nu_{21}$, $Q_{66} = G_{12}$, $Q_{44} = G_{13}$, $Q_{55} = G_{23}$ and $\frac{\nu_{12}}{E_1}=\frac{\nu_{21}}{E_2}$

After that, we need to transform the lamina stiffness matrix into a global form using the transformed coefficient. In global form, lamina with different angles and thickness of each layer

are computed. Hence, the transformed stiffness matrix $\bar{Q}_{ij}$ can be calculated. The stress-strain relations for a lamina about the structure axis system (x, y, z) may be written as below after doing the necessary transformation,

$$\begin{Bmatrix} \sigma_x \\ \sigma_y \\ \tau_{xy} \\ \tau_{xz} \\ \tau_{yz} \end{Bmatrix}_k = \begin{bmatrix} \bar{Q}_{11} & \bar{Q}_{12} & 0 & 0 & 0 \\ \bar{Q}_{12} & \bar{Q}_{22} & 0 & 0 & 0 \\ 0 & 0 & \bar{Q}_{66} & 0 & 0 \\ 0 & 0 & 0 & \bar{Q}_{44} & 0 \\ 0 & 0 & 0 & 0 & \bar{Q}_{55} \end{bmatrix}_k \begin{Bmatrix} \varepsilon_1 \\ \varepsilon_2 \\ \varepsilon_{12} \\ \varepsilon_{13} \\ \varepsilon_{23} \end{Bmatrix}_k \tag{9}$$

Integrating the stresses through the laminate thickness, the resultant forces and moments acting on the laminate may be obtained as below,

$$[N] = \begin{bmatrix} N_x \\ N_y \\ N_{xy} \end{bmatrix} = \sum_{k=1}^{N_L} \int_{Z_k}^{Z_{k+1}} \begin{bmatrix} \sigma_x \\ \sigma_y \\ \tau_{xy} \end{bmatrix} dz$$

$$[M] = \begin{bmatrix} M_x & M_x^* \\ M_y & M_y^* \\ M_{xy} & M_{xy}^* \end{bmatrix} = \sum_{k=1}^{N_L} \int_{Z_k}^{Z_{k+1}} \begin{bmatrix} \sigma_x \\ \sigma_y \\ \tau_{xy} \end{bmatrix} \left[z, z^3 \right] dz \tag{10}$$

$$\left[Q, S, S^*, S^{**} \right] = \begin{bmatrix} Q_x & S_x & S_x^* \\ Q_y & S_y & S_y^* \end{bmatrix} \begin{bmatrix} Q_x & S_x & S_x^* & S_x^{**} \\ Q_y & S_y & S_y^* & S_y^{**} \end{bmatrix} = \sum_{k=1}^{N_L} \int_{Z_k}^{Z_k+1} \begin{bmatrix} \tau_{xz} \\ \tau_{yz} \end{bmatrix} \left[1, z, z^2, z^3 \right] dz$$

or $\{\bar{\sigma}\} = [\bar{D}]\{\bar{\varepsilon}\}$, where

$$\left\{ \bar{\sigma} \right\} = \left[N_x, N_y, N_{xy}, M_x, M_y, M_{xy}, M_x^*, M_y^*, M_{xy}^*, \theta_x, \theta_y, S_x, S_y, S_x^*, S_y^*, S_x^{**}, S_y^{**} \right]^T$$

$$\left\{ \bar{\varepsilon} \right\} = \left[\varepsilon_{x0}, \varepsilon_{y0}, \gamma_{xy0}, K_x, K_y, K_{xy}, K_x^*, K_y^*, K_{xy}^*, \phi_x, \phi_y, K_{xz}, K_{yz}, K_{xz}^*, K_{yz}^*, K_{xz}^{**}, K_{yz}^{**} \right]^T$$

and $[\bar{D}]$ is the rigidity matrix of size 17x17.

2.1 Finite element formulation

A nine-noded isoparametric C_0 element with seven unknowns per node developed by Singh et. al [34] is used in the present finite element model. The nodal unknown vector {d} on the mid-surface of a typical element is given by:

$$\{d\} = \sum_{i=1}^{9} N_i(x,y)\{d_i\} \tag{11}$$

where $\{d_i\}$ is the nodal unknown vector corresponding to node i and N_i is the interpolating shape function associated with the node i. The problem of a skew shell as shown in Figure [2] is studied by using the proposed finite element model.

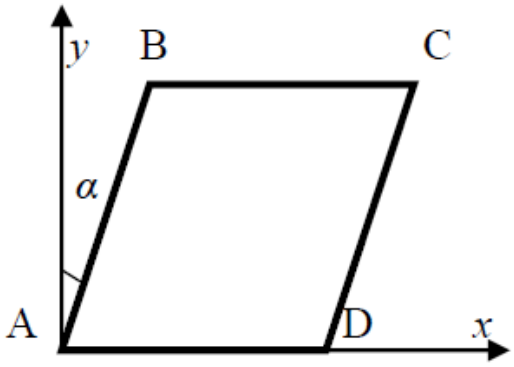

Figure 2 Mappedskewshell panel

As the sides AB and DC are inclined to global axis by an angle, α, necessary transformation is made to express the degrees of freedom of the nodes on these two sides.

After getting the generalized nodal unknown vector $\{d\}$ within an element, the generalized mid-surface strains at any point of the shell (Eq.: 6), can be expressed in terms of global displacements as shown below,

$$\{\bar{\varepsilon}\} = \sum_{i=1}^{9} [B_i]\{d_i\} \tag{12}$$

where $[B_i]$ is the differential operator matrix of interpolation functions which may be obtained from Equation (6).

The element stiffness matrix for an element (say, e-th), which includes membrane, flexure, thetransverse shear effects and their couplings may be expressed by the following equation:

$$[K_e] = \int_{-1}^{1}\int_{-1}^{1} [B]^T [D][B]\, j dr ds \tag{13}$$

A 3 × 3 Gaussian Quadrature scheme has been used in all numerical integrations. The element matrices are then assembled to obtain the global stiffness matrix, [K] by following the standard procedure of finite element method [10].

3 RESULTS AND DISCUSSION

In this section many problems of laminated composite shells are solved for normal as well as skew configurations using the present finite element model based on HSDT. A computer code is developed based on the above formulation for the implementation of the above model. As there is no result available in the literature in the present problem of laminated composite skew shell, the results obtained by the proposed model are validated by some published results on laminated composite shells of normal geometry. A mapped skew shell is shown in Figure 2. To validate the results for skew geometry, the present finite element results are first compared with some results of isotropic and composite skew plates. Then the results obtained by the present model are compared with some limited published results of skew shells using isotropic material. Many new results are generated for the benefit of the future researchers. The shell forms mainly considered for validation are spherical, conical, cylindrical and hypar shells while the problems of skew shells are restricted to cylindrical and hypar geometry.

The elastic properties of the lamina with respective to the material axes has been taken as $E_1/E_2 = 25$, $G_{12} = G_{13} = 0.5E_2$, $G_{23} = 0.2E_2$ and $\nu_{12} = 0.25$, unless mentioned otherwise.

The following boundary conditions are used in the present analysis:

1. Simply supported (SSSS):

$$v = w = \theta_y = \psi_y = 0, \text{ at } x = 0, \text{ a}$$
$$u = w = \theta_x = \psi_x = 0 \text{ at } y = 0, \text{ b}$$

2. Clamped (CCCC):

$$u = v = w = \theta_x = \theta_y = \psi_x = \psi_y = 0, \text{ at } x = 0, \text{ a and } y = 0, \text{ b}$$

3. Simply supported-Clamped (SCSC):

$$v = w = \theta_y = \psi_y = 0, \text{at } x = 0 \text{ and } u = w = \theta_x = \psi_x = 0 \text{ at } y = 0$$
$$u = v = w = \theta_x = \theta_y = \psi_x = \psi_y = 0, \text{at } x = a \text{ and at } y = b$$

3.1 Validation of the Present Formulation

In order to validate the present formulation, some problems are solved which are already reported in the literature.

3.1.1 Convergence Study

Convergence study is carried out in order to determine the required mesh size $N \times N$ at which the displacement values converge. Table 1 shows the convergence of the results of a simply supported cross-ply spherical shell subjected to uniform loading with a/b=1 and R_x=R_y=R with the

orthotropic elastic properties as mentioned earlier. Three different lamination schemes ($0^0/90^0$, $0^0/90^0/90^0$ and $0^0/90^0/90^0/0^0$) are considered.

Table 1 Non-dimensional central deflections $\left(\overline{w}\right)$ of a simply supported cross-ply laminated spherical shell under uniform load

R/a	Theory	Lamination scheme					
		$0^0/90^0$		$0^0/90^0/0^0$		$0^0/90^0/90^0/0^0$	
		a/h=100	a/h=10	a/h=100	a/h=10	a/h=100	a/h=10
5	Present (4 × 4)	1.7884	17.6364	1.5295	10.4708	1.5531	10.5789
	Present (6 × 6)	1.7668	17.6685	1.5168	10.4189	1.5426	10.5578
	Present (8 × 8)	1.7594	17.6797	1.5141	10.4165	1.5389	10.5590
	Present (12 × 12)	1.7527	17.6845	1.5116	10.4153	1.5355	10.5592
	Present (16 × 16)	1.7527	17.6845	1.5116	10.4153	1.5355	10.5592
	Reddy and Liu[33]	1.7519	17.566	1.5092	10.332	1.5332	10.476
3	Present (12 × 12)	0.6441	15.5328	0.6223	9.6498	0.6245	9.7766
4	Present (12 × 12)	1.1410	16.9436	1.0441	10.1608	1.0559	10.2989
10	Reddy and Liu[33]	5.5388	18.744	3.6426	10.752	3.7195	10.904
	Present (12 × 12)	5.5255	18.7762	3.6438	10.7743	3.7164	10.9266
20	Reddy and Liu[33]	11.268	19.064	5.5503	10.862	5.666	11.017
	Present (12 × 12)	11.1806	19.0699	5.5321	10.8678	5.6425	11.0223
50	Reddy and Liu[33]	15.711	19.155	6.4895	10.893	6.6234	11.049
	Present (12 × 12)	15.4844	19.1537	6.4394	10.8942	6.5726	11.0493
100	Reddy and Liu[33]	16.642	19.168	6.6496	10.898	6.7866	11.053
	Present (12 × 12)	16.3754	19.1658	6.6083	10.8980	6.7455	11.0532

The mesh divison parameter N is varied from 4 to 16. It may be observed in Table 1, that the values of non-dimensional central deflections, $\overline{w}=\left(-wh^3E_2/qa^4\right)$ converge for N=12. All subsequent analysis is carried out using the uniform mesh divison 12 X 12. It is found that the present results are in good agreement with HSDT results of Reddy and Liu [33].

3.1.2 Comparison of Results

3.1.2.1 Cross-ply laminated spherical shell

A cross-ply laminated spherical shell with a/b=1 and R_x=R_y=R with simply supported boundaries subjected to sinusoidal loading $\left(q=q_0\sin\frac{\pi x}{a}\sin\frac{\pi y}{b}\right)$ is considered for the analysis. This problem is earlier solved by Reddy and Liu [33]. The lamination schemes are taken as in the previous example. It is found that the present results are in close agreement with the results of Reddy and Liu [33] based on HSDT. The non-dimensional central displacements are obtained as, $\overline{w}=\left(-\frac{wh^3e_2}{qa^4}\right)10^3$.

Table 2 Non-dimensional central deflections of simply supported cross-ply laminated spherical shells under sinusoidally distributed load (a/b=1, R_x=R_y=R)

R/a	Theory	Lamination Scheme					
		$0^0/90^0$		$0^0/90^0/0^0$		$0^0/90^0/90^0/0^0$	
		a/h=100	a/h=10	a/h=100	a/h=10	a/h=100	a/h=10
5	Reddy and Liu[33]	1.1937	11.166	1.0321	6.7688	1.0264	6.7865
	Present	1.1907	11.2403	1.0321	6.8201	1.0254	6.8380
10	Reddy and Liu[33]	3.5733	11.896	2.4099	7.0325	2.4024	7.0536
	Present	3.5378	11.9161	2.4020	7.0459	2.3866	7.0670
20	Reddy and Liu[33]	7.1236	12.094	3.6170	7.1016	3.6133	7.1237
	Present	7.0046	12.0978	3.5717	7.1047	3.5603	7.1267
50	Reddy and Liu[33]	9.8692	12.150	4.2071	7.1212	4.2071	7.1436
	Present	9.5681	12.1498	4.1249	7.1213	4.1284	7.1436
100	Reddy and Liu[33]	10.444	12.158	4.3074	7.1240	4.3082	7.1464
	Present	10.1042	12.1571	4.2603	7.1237	4.2418	7.1459

3.1.2.2 Conical shell with different boundary conditions

A laminated $(0^0/90^0/0^0)$ conical shell panel is considered in this example with a slant edge L, radii at top and bottom R_t and R_b, respectively. The shell is subjected to uniform lateral pressure p. 12 X 12mesh is used to discretise the shell. The material properties considered are as follows: E_L = 2.0 X 10^{11} Pa, E_L/E_T = 2, 10, 20 and 30, G_{12}= G_{13}=0.5 X E_T, G_{23}= 0.2 X E_T, ν_{12}= ν_{13} = ν_{23} = 0.25.

The central deflections (Table 3) based on the present theory were found to be in good agreement with those obtained by Bhaskar and Varadan [3] based on HSDT for clamped boundary conditions. New results for boundary conditions like SSSS, SSCC and SCSC are also presented in Table 3. It can be observed that as the ratio E_L/E_T increases the deflection values decrease. On the other hand as the ratio R_b/h is increased from 10 to 100 there is considerable decrease in deflection. The geometry of conical shell is as shown in Figure [3].

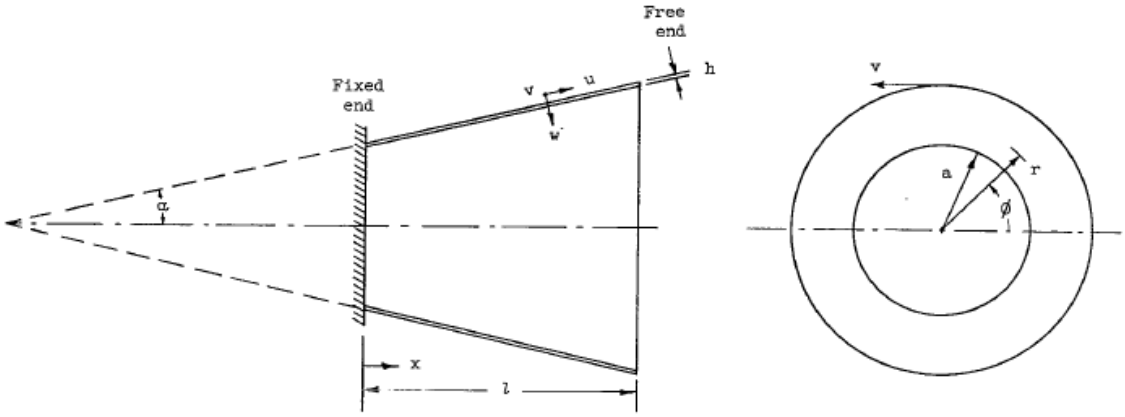

Figure 3 Conical Shell panels

Table 3 Non-dimensionalized central deflection $\overline{w} = 100\left(E_T h^3 w / pL^4\right)$ of a $(0^0/90^0/0^0)$ conical shell panel ($R_t = 0.8R_b$, $L = R_b$, $R_b/h=10$)

Boundary condition	R_b/h	Theory	E_L/E_T			
			2	10	20	30
CCCC	10	Bhaskar and Varadan [3]	0.3646	0.1270	0.0751	0.0538
		Present	0.3612	0.1318	0.0774	0.0551
	100	Present	0.0043	0.0015	0.0008	0.0005
SSSS	*10*	*Present*	*0.8517*	*0.4946*	*0.3910*	*0.3476*
	100	Present	0.0095	0.0083	0.0077	0.0075
SSCC	10	Present	0.4494	0.1765	0.1131	0.8546
	100	Present	0.0062	0.0026	0.0015	0.0011
SCSC	10	Present	0.5718	0.3036	0.2441	0.2206
	100	Present	0.0073	0.0053	0.0046	0.0043

3.1.2.3 Cylindrical shell

3.1.2.3.1 Cross-ply cylindrical shell

Simply supported three-ply $(0^0/90^0/0^0)$, four-ply $(0^0/90^0/0^0/90^0)$ and five-ply $(0^0/90^0/0^0/90^0/0^0)$ laminated cylindrical shells with $R_1/a = 4$ and $b/a = 3$ is considered in this example. Taking sinusoidal variation of loading $\left(q = q_0 \sin\frac{\pi x}{a}\sin\frac{\pi y}{b}\right)$ on the shells, the central deflections obtained by thepresent model are compared with the results of Reddy and Liu [33].

Table 4 Non-dimensional central deflection $\overline{w} = 100\left(E_T w / qhS^4\right)$ of simply supported laminated cylindrica lshell panel ($R_1/a = 4$, $a/h = 10$)

R_1/a	a/h	Lamination Scheme					
		$0^0/90^0/0^0$		$0^0/90^0/0^0/90^0/0^0$		$0^0/90^0/0^0/90^0$	
		Reddy [33]	Present	Reddy [33]	Present	Reddy [33]	Present
4	5	1.944	1.9218	1.896	1.8722	2.494	2.4505
	10	0.8712	0.8720	0.931	0.9304	1.441	1.4350
	100	-	0.4562	-	0.5312	-	0.8468
10	5	-	1.9026	-	1.8552	-	2.4377
	10	-	0.8637	-	0.9227	-	1.4289
	100	-	0.4965	-	0.5921	-	1.0336
20	5	-	1.8997	-	1.8527	-	2.4376
	10	-	0.8625	-	0.9216	-	1.4289
	100	-	0.5038	-	0.6017	-	1.0678
50	5	-	1.8990	-	1.8521	-	2.4385
	10	-	0.8621	-	0.9213	-	1.4293
	100	-	0.5055	-	0.6053	-	1.0764
100	5	-	1.9012	-	1.8520	-	2.4390
	10	-	0.8621	-	0.9213	-	1.4295
	100	-	0.5058	-	0.6054	-	1.0804

Note: Reddy [33] - Reddy's higher-order theory [multiplied by a factor $(1 + h/2R_1)\ (1 + h/2R_2,)$].

It is observed in Table 4 that for lower values of thickness ratio (a/h) present results slightly differ from the results presented by Reddy and Liu [33]. This difference may be due to the fact that the deflection results of Reddy and Liu [33] shown in Table 4 are multiplied by a factor $(1 + h/2R_1)\ (1 + h/2R_2,)$. Moreover, Reddy and Liu [33] have not included the effect of twist curvature $(1/R_{xy})$ in their formulation. The geometry of cylindrical shell is as shown in Figure [4]. It can also be observed that with increasing values of R_1/a and a/h the deflections decrease.

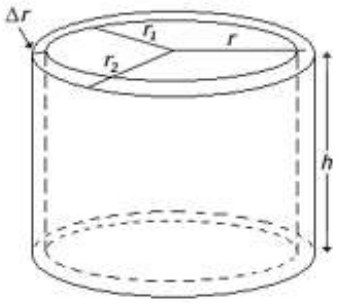

Figure 4 Perspective view of cylindrical shell panel

The lamination scheme $(0^0/90^0/0^0)$ was found to give lesser deflection compared to other schemes for a/h =10, 100 while for a/h=5, lamination scheme $(0^0/90^0/0^0/90^0/0^0)$ is found give lesser values for the deflections. It is also observed that the anti-symmetric lamination scheme $(0^0/90^0/0^0/90^0)$ gives higher results in all the cases.

3.1.2.3.2 Angle-ply cylindrical shell

In this example, an angle-ply (θ/- θ / θ /- θ / θ) cylindrical shell panel of square plan form, simply supported at all edges and subjected to uniform transverse pressure p is considered. Non-dimensional central deflections obtained by using the present model are compared with the corresponding results of Bhaskar and Varadan [3]. It may be observed in Table 5 that there are differences between the two results for higher values of ply angles (θ). This may be due to the reasons that the loading considered in the two models are slightly different; and also Bhaskar and Varadan [3] have not considered the twist curvature $(1/R_{xy})$ in their formulation which may be significant for angle ply lamination schemes. Some new results are also presented in Table 5. It is observed minimum deflection values corresponds toθ =45 for all the cases.

Table 5 Non-dimensionalized central deflection $\overline{w} = 100\left(E_T h^3 / pa^4\right)$ of simply supported angle-ply (θ /- θ / θ /- θ /θ) cylindrical shell panel.

R_0/a	a/h	Theory	θ =15	θ =30	θ =45	θ =60	θ =75
3	10	Bhaskar and Varadan [3]	0.8507	0.7393	0.6514	0.7525	0.8769
		Present	0.8470	0.7002	0.5994	0.6867	0.8265
	100	Present	0.1481	0.0761	0.0283	0.0664	0.1242
5	10	Present	0.8589	0.7276	0.6607	0.7224	0.8511
	100	Present	0.2854	0.1668	0.0831	0.1597	0.2633
10	10	Present	0.8639	0.7399	0.6903	0.7385	0.8619
	100	Present	0.4626	0.3234	0.2177	0.3202	0.4498
20	10	Present	0.8652	0.7429	0.6981	0.7427	0.8647
	100	Present	0.5452	0.4197	0.3433	0.4191	0.5423
50	10	Present	0.8655	0.7439	0.7004	0.7438	0.8655
	100	Present	0.5714	0.4585	0.4071	0.4604	0.5768
100	10	Present	0.8656	0.7439	0.7007	0.7439	0.8656
	100	Present	0.5792	0.4662	0.4193	0.4671	0.5815

3.1.2.4 Hypar shell

In this example cross-ply laminated hypar shells having four lamination schemes of $(0^0/90^0)$, $(0^0/90^0/90^0/0^0)$, $(0^0/90^0/0^0/90^0)$ and $(0^0/90^0/0^0/90^0/0^0)$with simply supported as well as clamped boundary conditions with varying c/a ratios (0 to 0.2) are considered. The shell is subjected to uniform as well as sinusoidal loadings. It may be noted that the c/a ratio is an indicator of the

twist curvature of the hypar shell. The results are compared with those obtained by Pradyumna and Bandyopadhyay [31] and found to match very well with each other. Some new results are also presented. Lamination scheme $0^0/90^0/90^0/0^0$ is found to give lesser deflections in all cases especially in case of clamped boundary (CCCC) conditions. The geometry of hypar shell is as shown in Figure [5].

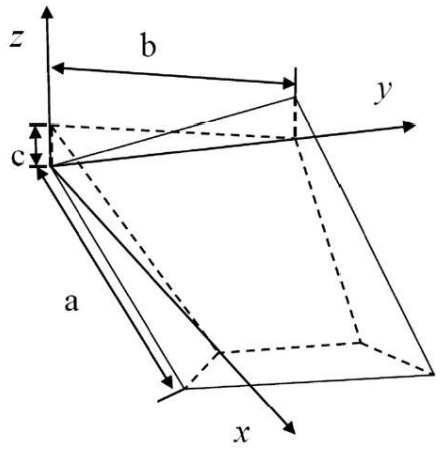

Figure 5 Perspective view of hypar shell panel

Table 6 Non-dimensional central deflection of cross-ply laminatedhypar shell panel

c/a	Theory	Lamination scheme							
		$0^0/90^0$		$0^0/90^0/90^0/0^0$		$0^0/90^0/0^0/90^0$		$0^0/90^0/0^0/90^0/0^0$	
		a/h = 100	a/h = 10	a/h = 100	a/h = 10	a/h = 100	a/h = 10	a/h = 100	a/h = 10
SSSS-uniform									
0	Pradyumna and Bandyopadhyay [31]	16.9763	-	6.8436	-	8.1137	-	-	-
	Present	16.4961	19.1698	6.8008	11.0546	8.0119	10.6923	6.8579	9.8175
0.05	Pradyumna and Bandyopadhyay [31]	2.3744	-	1.9629	-	2.0922	-	-	-
	Present	2.3696	17.9858	1.9556	10.6522	2.0861	10.3190	1.9841	9.5001
0.1	Pradyumna and Bandyopadhyay [31]	0.6193	-	0.5972	-	0.6252	-	-	-
	Present	0.6188	15.1714	0.5966	9.6030	0.6247	9.3402	0.6101	8.6616
0.15	Pradyumna and Bandyopadhyay [31]	0.2610	-	0.2638	-	0.2767	-	-	-
	Present	0.2608	12.0271	0.2637	8.2471	0.2765	8.0642	0.2714	7.5492
0.2	Pradyumna and Bandyopadhyay [31]	0.1388	-	0.1434	-	0.1504	-	-	-
	Present	0.1384	9.3147	0.1432	6.8835	0.1502	6.7680	0.1477	6.3972

Table 6 (continued)

SSSS-sinusoidal									
0	Pradyumna and Bandyopadhyay [31]	10.6524	-	4.3441	-	5.0857	-	-	-
	Present	10.3521	12.1582	4.3160	7.1463	5.0214	6.8644	4.3216	6.3447
0.05	Pradyumna and Bandyopadhyay [31]	1.6785	-	1.3511	-	1.3866	-	-	-
	Present	1.6714	11.4372	1.3453	6.9039	1.3819	6.6391	1.3310	6.1540
0.1	Pradyumna and Bandyopadhyay [31]	0.5672	-	0.4966	-	0.4781	-	-	-
	Present	0.5654	9.7232	0.4956	6.2718	0.4771	6.0483	0.4781	5.6491
0.15	Pradyumna and Bandyopadhyay [31]	0.3167	-	0.2716	-	0.2545	-	-	-
	Present	0.3158	7.8083	0.2712	5.4550	0.2539	5.2783	0.2575	4.9799
0.2	Pradyumna and Bandyopadhyay [31]	0.2180	-	0.1800	-	0.1680	-	-	-
	Present	0.2173	6.1563	0.1797	4.6336	0.1675	4.4964	0.1698	4.2870
CCCC-uniform									
0	Pradyumna and Bandyopadhyay [31]	3.9672	-	1.4859	-	1.7894	-	-	-
	Present	3.9276	5.8701	1.4767	4.8050	1.7738	4.0677	1.4785	4.0236
0.05	Pradyumna and Bandyopadhyay [31]	1.3371	-	0.8459	-	0.9640	-	-	-
	Present	1.3349	5.7104	0.8432	4.6902	0.9606	3.9857	0.8585	3.9424
0.1	Pradyumna and Bandyopadhyay [31]	0.3901	-	0.3451	-	0.3791	-	-	-
	Present	0.3923	5.2770	0.3455	4.3748	0.3797	3.7574	0.3588	3.7162
0.15	Pradyumna and Bandyopadhyay [31]	0.1576	-	0.1613	-	0.1732	-	-	-
	Present	0.1589	4.6781	0.1619	3.9289	0.1741	3.4269	0.1693	3.3887
0.2	Pradyumna and Bandyopadhyay [31]	0.0805	-	0.0879	-	0.0917	-	-	-
	Present	0.0810	4.0268	0.0883	3.4307	0.0924	3.0460	0.0918	3.0114

Table 6 (continued)

CCCC-sinusoidal									
0	Pradyumna and Bandyopadhyay [31]	2.8703	-	1.0967	-	1.2944	-	-	-
	Present	2.8445	4.2399	1.0909	3.4731	1.2847	2.9326	1.0819	2.9112
0.05	Pradyumna and Bandyopadhyay [31]	1.0168	-	0.6440	-	0.7138	-	-	-
	Present	1.0140	4.1300	0.6418	3.3949	0.7115	2.8770	0.6430	2.8561
0.1	Pradyumna and Bandyopadhyay [31]	0.3335	-	0.2826	-	0.2988	-	-	-
	Present	0.3337	3.8316	0.2424	3.1800	0.2989	2.7220	0.2853	2.7024
0.15	Pradyumna and Bandyopadhyay [31]	0.1524	-	0.1433	-	0.1484	-	-	-
	Present	0.1526	3.4189	0.1433	2.8757	0.1485	2.4973	0.1451	2.4797
0.2	Pradyumna and Bandyopadhyay [31]	0.0852	-	0.0837	-	0.0836	-	-	-
	Present	0.0853	2.9694	0.0837	2.5350	0.0856	2.2380	0.0847	2.2225

3.2 Analysis of laminated composite skew shell

In this section some examples of laminated composite skew hypar and cylindrical shells are studied using the present FE model based on HSDT.

3.2.1 Skew Hypar shell

Skew hypar shells (b/a =1) having different boundary conditions are considered in this example taking three different lamination schemes ($0^0/90^0$, $0^0/90^0/0^0$, $0^0/90^0/0^0/90^0$) and varying c/a ratio (0.0, 0.1, 0.2) as well as a/h ratio (10, 100). Skew angles are varied from 0^0 to 45^0. Non-dimensional central deflections ($\bar{w} = \left(\frac{10^3 w h^3 E_2}{q_0 a^4} \right)$) and stresses obtained by using the present FE model are shown in Table 7 and Table 8 respectively. The present results for c/a = 0, representing plate geometry are compared with the corresponding results obtained by Chakrabartiet. al [5] for simply supported skew composite plates. It may be observed from Table 7 and 8 that the present results are matching quite well with those obtained by Chakrabarti et al.. [5]. The present model is therefore used to generate other new results. It is observed that the deflection values tend to decrease with increase in c/a ratio as well as a/h ratio. In this case of skew hypar shell, lamination scheme ($0^0/90^0/0^0/90^0$) was found to give minimum central deflections. Thin shells (a/h = 100) with clamped boundary condition (CCCC) are found to give minimum deflections in all the cases listed in Table 7. Non-dimensional stresses for the same problem of hypar shell are also presented in Table 8 (a/h = 100). In-plane normal stresses and transverse shear stress are non-dimensionalized using following factors:

$$\bar{\sigma}_x = \sigma_x\left(\frac{a}{2},\frac{b}{2},-\frac{h}{2}\right)h^2\Big/q_0a^2\ ,\ \bar{\sigma}_y = \sigma_y\left(\frac{a}{2},\frac{b}{2},z\right)h^2\Big/q_0a^2$$

$$\left(N=2,z=h/2;N=3,z=h/6;N=4,z=h/4\right),\ \bar{\tau}_{xy} = \tau_{xy}\left(0,0,-\frac{h}{2}\right)h^2\Big/q_0a^2$$

Table 7 Non-dimensional central deflections of a laminated composite hypar shell panel subjected to uniform loading (b/a =1)

Boundary condition	c/a	Skew angle	Lamination scheme					
			$0^0/90^0$		$0^0/90^0/0^0$		$0^0/90^0/0^0/90^0$	
			a/h =10	a/h=100	a/h=10	a/h=100	a/h=10	a/h=100
SSSS	0.0	0^0	19.2188	16.9637	10.9812	6.7064	10.6967	8.1081
			-	-	10.9117[1]	6.7168	-	-
		15^0	16.5631	14.2388	10.4300	6.4294	9.4613	6.8517
			-	-	10.3669[1]	6.4392	-	-
		30^0	10.7202	8.6394	8.6613	5.4608	6.4902	4.1722
			-	-	8.6217[1]	5.4708	-	-
		45^0	5.2223	3.7667	5.7181	3.6190	3.4184	1.8098
			-	-	5.7105[1]	3.6333	-	-
	0.1	0^0	15.1721	0.6188	9.4652	0.5680	9.3404	0.6247
		15^0	13.9406	0.5797	8.9882	0.5505	8.4446	0.5890
		30^0	9.8189	0.5580	7.6182	0.5364	6.0453	0.5487
		45^0	5.0687	0.5756	5.2683	0.5430	3.3177	0.5016
	0.2	0^0	9.3148	0.1384	6.7769	0.1358	6.7681	0.1502
		15^0	8.9257	0.1237	6.4289	0.1326	6.2558	0.1387
		30^0	7.1747	0.1203	5.6522	0.1296	4.8556	0.1325
		45^0	4.3850	0.1364	4.3095	0.1399	2.9727	0.1416
CCCC	0.0	0^0	6.2088	3.9552	5.2198	1.4184	4.3159	1.7830
		15^0	5.6912	3.5419	4.9871	1.3899	4.0084	1.6007
		30^0	4.2922	2.4602	4.2252	1.2692	3.1558	1.1183
		45^0	2.5206	1.1936	2.8971	0.9582	2.0114	0.5458
	0.1	0^0	5.3198	0.3923	4.4877	0.3269	3.8027	0.3797
		15^0	4.9039	0.3916	4.3088	0.3268	3.5443	0.3712
		30^0	3.7603	0.3832	3.7114	0.3263	2.8215	0.3388
		45^0	2.2386	0.3395	2.6144	0.3135	1.8189	0.2582
	0.2	0^0	4.0479	0.0810	3.4924	0.0882	3.0735	0.0924
		15^0	3.7987	0.0828	3.3809	0.0879	2.8991	0.0933
		30^0	3.0725	0.0879	3.0008	0.0879	2.3943	0.0951
		45^0	1.9781	0.0945	2.2423	0.0909	1.6315	0.0927

Table 7 (continued)

SCSC	0.0	0^0	9.9870	7.2803	7.2947	2.7499	6.3726	3.3415
		15^0	8.9476	6.3348	6.9529	2.6690	5.8152	2.9199
		30^0	6.4114	4.2032	5.8512	2.3629	4.3639	1.9459
		45^0	3.5369	1.9953	3.9673	1.6895	2.5920	0.9269
	0.1	0^0	8.2657	0.4209	6.2159	0.3801	5.5637	0.4322
		15^0	7.5967	0.4223	5.9545	0.3798	5.1347	0.4255
		30^0	5.7087	0.4322	5.1217	0.3889	3.9584	0.4085
		45^0	3.2650	0.4374	3.6102	0.4034	2.4162	0.3546
	0.2	0^0	5.6746	0.0827	4.5737	0.0928	4.2349	0.0968
		15^0	5.3960	0.0856	4.4209	0.0923	3.9914	0.0984
		30^0	4.4532	0.0935	3.9627	0.0946	3.2720	0.1035
		45^0	2.8774	0.1103	3.0405	0.1068	2.1736	0.1122

[1] Results of these rows corresponds to Chakrabarti et al. [5].

Table 8 Non-dimensional stresses of a laminated composite hypar shell panel subjected to uniform loading (b/a =1, a/h = 100)

c/a	Skew angle	Laminationscheme								
		$0^0/90^0$			$0^0/90^0/0^0$			$0^0/90^0/0^0/90^0$		
		$\bar{\sigma}_x$	$\bar{\sigma}_y$	$\bar{\tau}_{xy}$	$\bar{\sigma}_x$	$\bar{\sigma}_y$	$\bar{\tau}_{xy}$	$\bar{\sigma}_x$	$\bar{\sigma}_y$	$\bar{\tau}_{xy}$
Simplysupported (SSSS)										
0.0	0^0	1.0762	-1.0762	-0.0940	0.8094	0.1937	-0.0432	0.7374	0.7005	-0.0447
	15^0	0.9496	-0.9598	-0.0473	0.7757	0.2196	-0.0270	0.6464	0.6262	-0.0169
	30^0	0.6435	-0.7258	-0.0053	0.6597	0.2807	-0.0136	0.4344	0.4696	-0.0014
	45^0	0.3200	-0.4969	0.0027	0.4482	0.3193	-0.0033	0.2158	0.3190	0.0007
0.1	0^0	0.0244	-0.0244	-0.0237	0.0614	0.0051	-0.0234	0.0448	0.0425	-0.0229
	15^0	0.0047	-0.0248	-0.0058	0.0472	0.0037	-0.0047	0.0288	0.0424	-0.0034
	30^0	-0.0209	-0.0334	-0.0029	0.0284	0.0094	-0.0029	0.0094	0.0505	-0.0014
	45^0	-0.0390	-0.0681	-0.0014	0.0123	0.0330	-0.0031	-0.0019	0.0810	-0.0014
0.2	0^0	0.0019	-0.0019	-0.0109	0.0123	-0.0012	-0.0112	0.0060	0.0057	-0.0110
	15^0	-0.0079	-0.0016	-0.0028	0.0051	-0.0009	-0.0021	-0.0029	0.0065	-0.0016
	30^0	-0.0211	-0.0024	-0.0017	-0.0054	-0.0005	-0.0015	-0.0152	0.0089	-0.0008
	45^0	-0.0379	-0.0112	-0.0009	-0.0161	0.0046	-0.0018	-0.0273	0.0201	-0.0009
Clamped (CCCC)										
0.0	0^0	0.4036	-0.4036	0	0.2788	0.0406	0	0.2592	0.2448	0
	15^0	0.3647	-0.3897	0	0.2728	0.0529	0	0.2337	0.2367	0
	30^0	0.2651	-0.3410	0	0.2479	0.0880	0	0.1688	0.2077	0
	45^0	0.1471	-0.2508	0	0.1879	0.1282	0	0.0932	0.1529	0
0.1	0^0	0.0134	-0.0134	0	0.0530	-0.0045	0	0.0369	0.0348	0
	15^0	0.0126	-0.0179	0	0.0510	-0.0055	0	0.0347	0.0383	0
	30^0	0.0148	-0.0329	0	0.0486	0.0018	0	0.0328	0.0500	0
	45^0	0.0202	-0.0604	0	0.0450	0.0244	0	0.0310	0.0658	0
0.2	0^0	-0.0042	0.0042	0	0.0065	-0.0014	0	0	-0.0001	0
	15^0	-0.0043	0.0045	0	0.0059	-0.0027	0	-0.0005	0.0010	0
	30^0	-0.0037	0.0027	0	0.0053	-0.0041	0	0.0004	0.0055	0
	45^0	-0.0023	-0.0073	0	0.0046	-0.0014	0	0.0029	0.0171	0

Table 8 (continued)

Simply supported-Clamped (SCSC)										
0.0	0^0	0.5591	-0.5591	-0.0609	0.4056	0.0840	-0.0273	0.3686	0.3532	-0.0282
	15^0	0.4948	-0.5262	-0.0331	0.3929	0.1036	-0.0176	0.3221	0.3364	-0.0116
	30^0	0.3534	-0.4368	-0.0048	0.3466	0.1493	-0.0095	0.2261	0.2834	-0.0013
	45^0	0.1856	-0.3123	0.0013	0.2495	0.1916	-0.0026	0.1181	0.2076	0.0004
0.1	0^0	0.0047	-0.0125	-0.0191	0.0453	-0.0148	-0.0182	0.0248	0.0231	-0.0158
	15^0	-0.0079	-0.0193	-0.0078	0.0356	-0.0180	-0.0066	0.0132	0.0255	-0.0042
	30^0	-0.0250	-0.0359	-0.0028	0.0223	-0.0092	-0.0035	0.0001	0.0395	-0.0011
	45^0	-0.0375	-0.0642	-0.0002	0.0089	0.0214	-0.0019	-0.0069	0.0677	-0.0323
0.2	0^0	-0.0052	0.0044	-0.0106	0.0051	-0.0057	-0.0099	-0.0028	-0.0029	-0.0089
	15^0	-0.0109	0.0037	-0.0044	0.0005	-0.0083	-0.0037	-0.0087	-0.0024	-0.0025
	30^0	-0.0210	-0.0003	-0.0018	-0.0071	-0.0097	-0.0020	-0.0175	0.0013	-0.0008
	45^0	-0.0357	-0.0110	-0.0003	-0.0177	-0.0042	-0.0012	-0.0267	0.0142	-0.0003

3.2.2 Skew Cylindrical shell

In this example, Cross-ply laminated skew cylindrical shells (b/a=3) having symmetric lamination scheme as ($0^0/90^0/0^0$) and anti-symmetric lamination schemes as ($0^0/90^0$), ($0^0/90^0/0^0/90^0$) with simply supported and clamped boundary conditions are considered. The skew angle is varied from 0^0 to 45^0. These shells are subjected to uniform loading with varying R/a (3, 10, 100) as well as a/h (10, 100) ratios.

In Table 9 the values of non-dimensional central deflections $\left(\overline{w}\right)$ of three different lamination schemes are presented for different skew angles. It can be observed that the deflection values decrease with increase in skew angle. Also there is not much effect of R/a ratio on the deflection values. The clamped boundary condition is more effective in reduction of deflection values as compared to the simply supported boundary condition. The reduction in deflection with increase in a/h ratio from 10 to 100 makes thin shells more effective. The superiority of ($0^0/90^0/0^0$) lamination scheme is observed in all the cases mentioned in Table 9.

Present results for stresses of cylindrical shell panel (b/a=3, R/a=4) subjected to sinusoidal loading are shown in Table 10. Some of the present results are compared with those of Xiao-ping [39] for zero skew angle and found to be in good agreement. The lamination scheme ($0^0/90^0/0^0$) is found to be superior. Normal stresses decrease as the value of skew angle increases. Stresses are least in the case of clamped boundary condition. In all the cases listed; values of shear stress are much lesser compared to other stresses.

Table 9 Non-dimensional central deflections of a laminated composite cylindrical shell panel subjected to uniform loading (b/a =3)

Boundary condition	R/a	Skew angle	Lamination scheme					
			$0^0/90^0$		$0^0/90^0/0^0$		$0^0/90^0/0^0/90^0$	
			a/h =10	a/h=100	a/h=10	a/h=100	a/h=10	a/h=100
SSSS	3	0^0	38.6423	17.5678	11.2634	6.2711	20.1208	11.0884
		15^0	35.7127	8.7441	11.0503	4.3794	18.8462	6.4675
		30^0	26.3440	2.4594	10.0582	1.7653	14.4127	2.0799
		45^0	13.2141	0.4843	7.2277	0.4157	7.6007	0.4280
	10	0^0	38.4591	32.2695	10.9839	6.5265	19.8321	14.8302
		15^0	35.6285	27.1971	10.8545	6.2772	18.7313	13.2245
		30^0	25.9215	15.8484	10.2259	5.1350	14.6473	8.4976
		45^0	12.2178	6.1815	8.2528	2.6949	7.9607	3.3300
	100	0^0	38.5372	34.3715	10.9568	6.48221	19.8325	15.0855
		15^0	35.4921	31.8843	10.8352	6.4357	18.7187	14.3902
		30^0	25.1606	22.6344	10.2421	6.2211	14.5660	11.1852
		45^0	11.2650	9.9188	8.3683	5.3999	7.7924	5.5613
CCCC	3	0^0	5.4914	0.1277	3.2664	0.0923	4.3743	0.1242
		15^0	5.3737	0.1271	3.2430	0.0921	4.2795	0.1239
		30^0	4.7629	0.1251	3.1225	0.0913	3.7558	0.1224
		45^0	3.1886	0.1205	2.6770	0.0891	2.5287	0.1154
	10	0^0	9.3282	1.1821	4.8846	0.6000	6.6049	0.9538
		15^0	8.9780	1.1732	4.8322	0.5977	6.3762	0.9484
		30^0	7.3744	1.1221	4.5641	0.5872	5.2632	0.8985
		45^0	4.1901	0.9215	3.6614	0.5508	3.1421	0.6729
	100	0^0	10.0241	6.3319	5.1342	1.3081	6.9555	2.8344
		15^0	9.6189	6.1223	5.0764	1.2977	6.7008	2.7854
		30^0	7.7994	5.0049	4.7805	1.2528	5.4809	2.3783
		45^0	4.3241	2.5959	3.7980	1.1056	3.2191	1.2628
SCSC	3	0^0	17.6312	6.2102	7.3655	2.3365	10.9063	4.0331
		15^0	16.6497	4.0103	7.2339	1.9001	10.3625	2.8937
		30^0	12.9507	1.2835	6.5332	0.9088	8.1242	1.0771
		45^0	6.8585	0.2697	4.5251	0.2394	4.4016	0.2403
	10	0^0	17.7013	12.6187	7.2659	2.6306	10.8758	5.7734
		15^0	16.8148	11.2045	7.1814	2.5585	10.4146	5.3678
		30^0	13.1846	7.0018	6.7511	2.1823	8.4134	3.7366
		45^0	6.9278	2.7386	5.3537	1.2625	4.8174	1.5215
	100	0^0	17.7372	13.5193	7.2558	2.6230	10.8830	5.8865
		15^0	16.8055	12.8839	7.1757	2.6014	10.4203	5.7363
		30^0	12.9510	9.9939	6.7728	2.5095	8.3959	4.7387
		45^0	6.5691	4.8274	5.4520	2.1991	4.7650	2.4543

Table 10 Non-dimensional stresses of laminated cylindrical shell subjected to sinusoidal loading (b/a=3, R/a=4)

a/h	Skew angle	Lamination scheme								
		$0^0/90^0$			$0^0/90^0/0^0$			$0^0/90^0/0^0/90^0$		
		$\bar{\sigma}_x$	$\bar{\sigma}_y$	$\bar{\tau}_{xy}$	$\bar{\sigma}_x$	$\bar{\sigma}_y$	$\bar{\tau}_{xy}$	$\bar{\sigma}_x$	$\bar{\sigma}_y$	$\bar{\tau}_{xy}$
Simply Supported (SSSS)										
10	0^0	1.6878	0.2719	0.0521	0.6930	0.0608	0.0141	1.1007	0.1842	0.0257
		-	-	-	0.6985[2]	0.0603	0.0140	1.100	0.1846	0.02573
	15^0	0.5902	0.1366	0.0133	0.2686	0.0395	0.0054	0.3921	0.0096	0.0034
	30^0	0.6109	0.3359	0.0009	0.3642	0.1074	0.0019	0.4122	0.2199	0.0035
	45^0	0.4967	0.4957	0.0015	0.4403	0.2503	0.0097	0.3339	0.3451	0.0012
100	0^0	0.9797	0.3860	0.0708	0.5553	0.1283	0.0202	0.8029	0.2496	0.0404
	15^0	0.1857	0.0875	0.0096	0.1763	0.0425	0.0047	0.1956	0.0728	0.0051
	30^0	0.1215	0.0738	0.0025	0.1495	0.0496	0.0025	0.1170	0.0754	0.0011
	45^0	0.0318	0.0507	0.0009	0.1349	0.0469	0.0016	0.0443	0.0680	0.0003
Clamped (CCCC)										
10	0^0	0.2937	0.0547	0	0.3510	0.0161	0.0054	0.2022	0.0529	0
	15^0	0.0991	0.0330	0	0.1344	0.0125	0.0014	0.0688	0.0309	0
	30^0	0.1613	0.1197	0	0.2040	0.0416	0	0.1124	0.0959	0
	45^0	0.1719	0.2246	0	0.2727	0.1256	0	0.1237	0.1672	0
100	0^0	0.0070	0.0042	0	0.0810	0.0014	0	0.0099	0.0038	0
	15^0	0.0215	0.0034	0	0.0305	0.0001	0	0.0116	0.0008	0
	30^0	0.0128	0.0028	0	0.0509	0.0021	0	0.0023	0.0054	0
	45^0	0.0052	0.0111	0	0.0819	0.0045	0	0.0043	0.0224	0
Simply Supported-Clamped (SCSC)										
10	0^0	0.9357	0.1408	0.0333	0.4399	0.0379	0.0122	0.6434	0.1115	0.0189
	15^0	0.3967	0.1098	0.0099	0.1968	0.0359	0.0041	0.2733	0.0804	0.0026
	30^0	0.3541	0.1589	0.0010	0.2231	0.0297	0.0021	0.2389	0.1084	0.0007
	45^0	0.3238	0.3402	0.0003	0.3240	0.1523	0.0013	0.2161	0.2310	0.0005
100	0^0	0.44612	0.1327	0.0482	0.2829	0.0423	0.0145	0.3849	0.0895	0.0280
	15^0	0.0891	0.0652	0.0075	0.1163	0.0306	0.0031	0.1139	0.0545	0.0038
	30^0	0.0839	0.0264	0.0028	0.0898	0.0268	0.0021	0.0721	0.0139	0.0016
	45^0	0.0002	0.0034	0.0017	0.0989	0.0027	0.0019	0.0093	0.0196	0.0013

[2]Results of this row corresponds to Xiao-ping [39]

3.2.2.2 Angle-ply laminated skew cylindrical shell

Angle-ply laminated (45^0/-45^0/45^0/-45^0) skew cylindrical shell (b/a =3) is considered in this example. The shell is subjected to uniform loading with different boundary conditions such as simply supported and clamped. The skew angle is varied from 0^0 to 45^0. The R/a (3, 10, 100) as well as a/h (10, 100) ratios are also varied.

Variation of non-dimensional central deflection (Figures 6a-6e) and in-plane normal stress (Figures 7a-7e) with skew angle is presented [Figures (a, b): Simply supported, Figures (c, d): Clamped and Figures (e, f):- Simply supported-clamped boundary conditions]. As in the case of

clamped boundary condition, the in-plane shear stress was found to be zero for all the cases; variation of in-plane shear stress with skew angle is shown (Figures 8a-8d) only for two boundary conditions [Figure 8(a, b): Simply supported, 8(c, d): Simply supported-clamped boundary conditions]. From the figures it can be observed that the deflection and stresses follow the expected general trend. With increase in R/a ratio, central deflection values differ significantly in case of thin shells ($a/h = 100$) as compared to those for thick shells ($a/h = 10$). Deflection and stresses tend to decrease as the skew angle increases. In Figures 8 it can be observed that in-plane shear stresses tend to attain minimum value approximately at skew angle of 30^0.

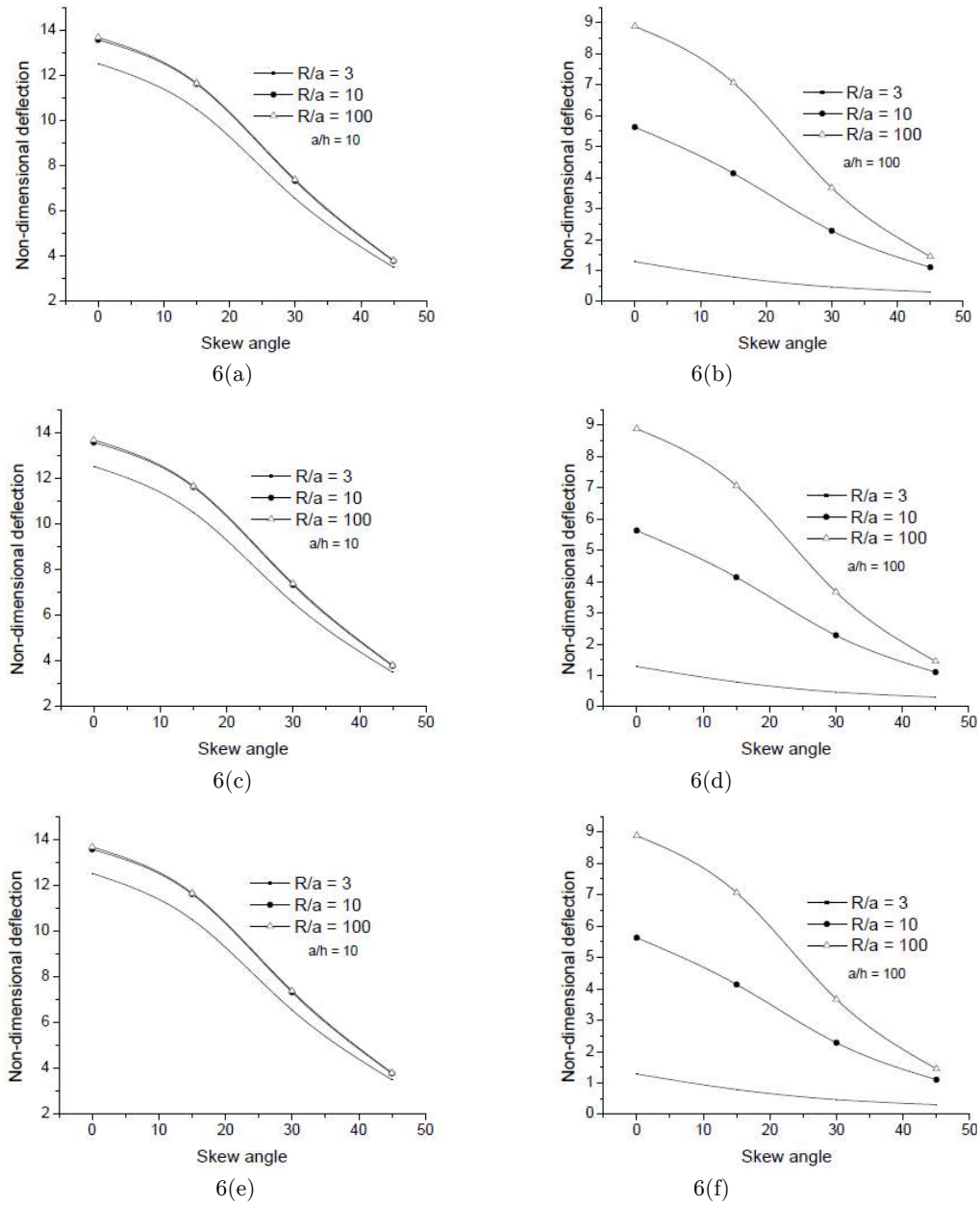

Figure 6 Variation of non-dimensional central deflections $\left(\overline{w}\right)$ of laminated angle ply skew composite cylindrical shell With skew angles

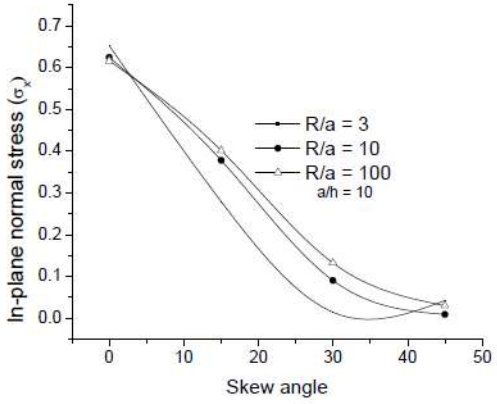

7(a)

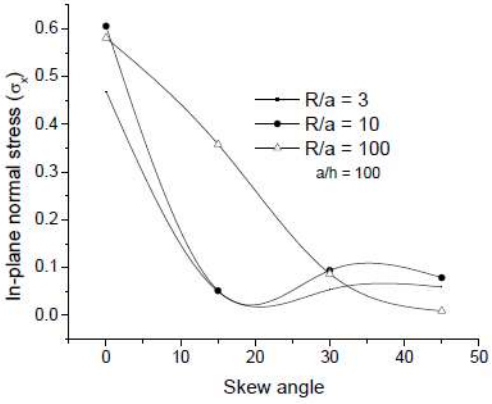

7(b)

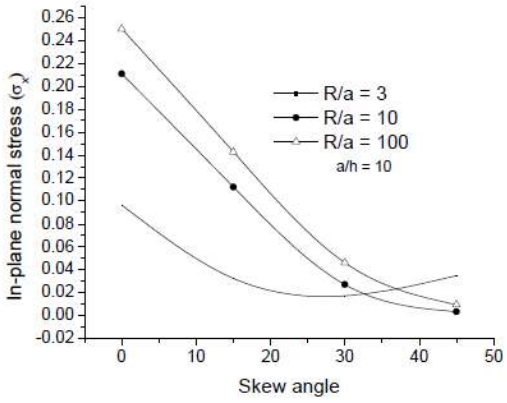

7(c)

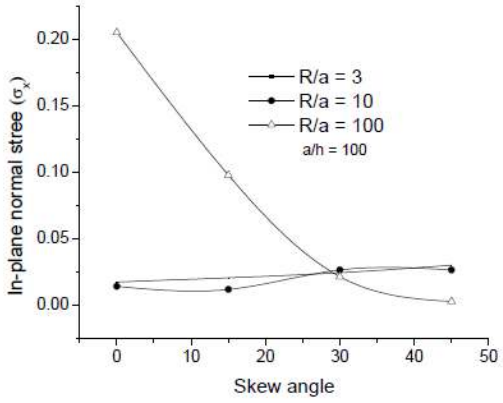

7(d)

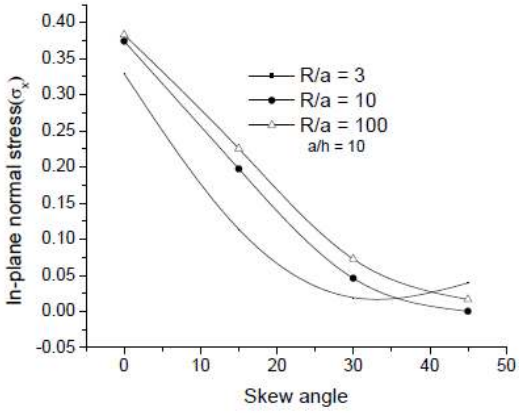

7(e)

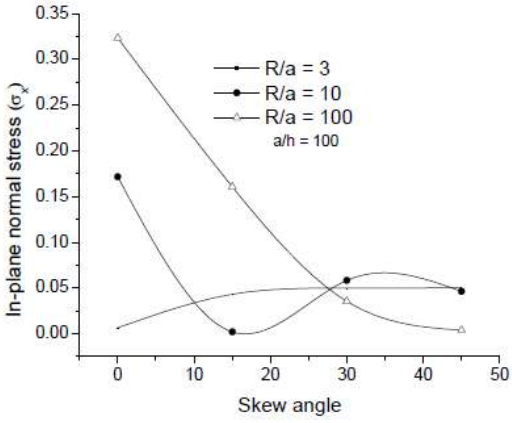

7(f)

Figure 7 Variation of non-dimensional in-plane normal stress ($\overline{\sigma}_x$) of laminated angle ply skew composite cylindrical shell with skew angles

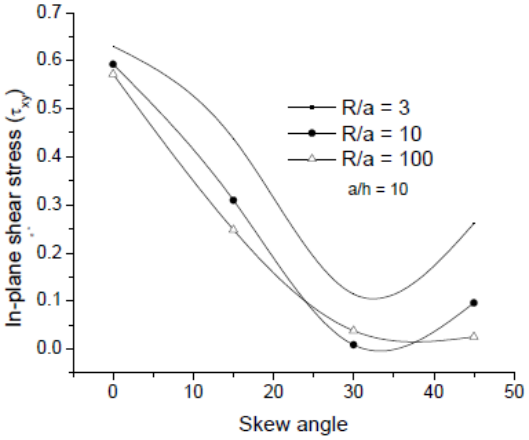

8(a)

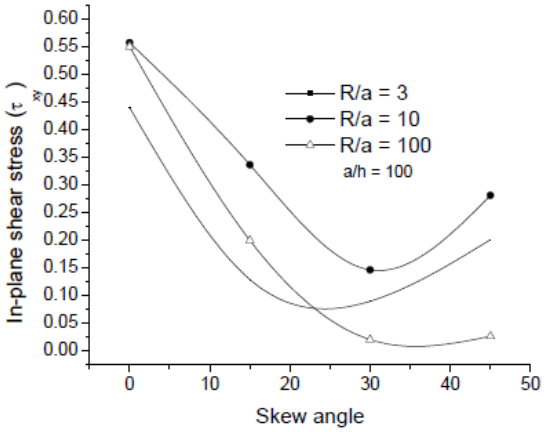

8(b)

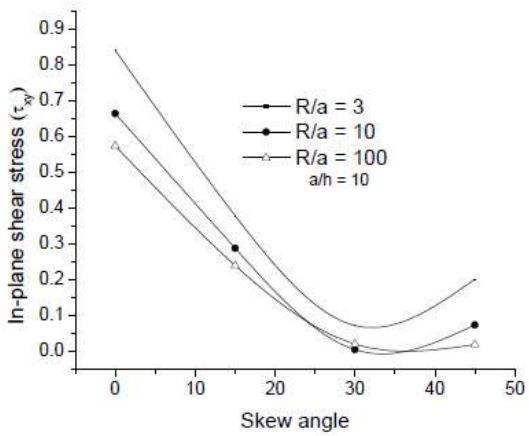

8(c)

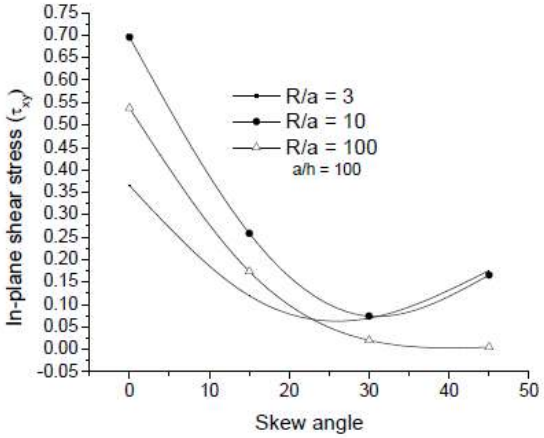

8(d)

Figure 8Variation of non-dimensional in-plane shear stress $\overline{\tau}_{xy}$ of laminated angle ply skew composite cylindrical shell with skew angles

4 CONCLUSIONS

In this paper, a new finite element model has been developed for the analysis of skew composite shells based on higher order shear deformation theory (HSDT) using a C_0 formulation. In this model there is no need to include any shear correction factor. Three radii of curvatures including the cross curvature effects are also considered in the FE formulation which accounts for twisting effect of the geometry. Different shell forms considered in this study include spherical, conical, cylindrical and hypar shells. It is observed there is no result available in the literature on the present problem of skew composite shell. Therefore, many new results are generated on the static response of laminated composite skew shells considering different geometry, boundary conditions, ply orientation, loadings and skew angles which should be useful for future research.
The following general conclusions are made:

1. Central deflection values are lesser for thin shells (a/h=100) as compared to thick shells (a/h=10) for all the types of shells considered in this paper.
2. The lamination scheme $0^0/90^0/0^0$ is found to give minimum central deflection values for spherical, cylindrical and hypar shells.
3. In cylindrical and spherical shells, as the R/a ratio increases central deflection values decrease.
4. Laminated composite angle-ply (θ /- θ / θ /- θ /θ) cylindrical shell gives minimum deflection values corresponds to θ =45 for all the cases.
5. Laminated composite skew hypar shell give minimum central deflection for lamination scheme ($0^0/90^0/0^0/90^0$).
6. In-plane normal stresses decrease as the skew angle increases in case of laminated composite skew cylindrical shell.
7. In-plane shear stresses are much lesser compared to in-plane normal stresses for both cylindrical and hypar shells.

References

[1] A. K. Aditya and J. N. Bandyopadhyay, Simplified Bending Analysis of Doubly Curved Shells, Computers & Structures, 33(3): 781–784 (1989).

[2] C. W. Bert, Dynamics of composite and sandwich panels-Parts I and IX (corrected title). Shock Vib. Dig. 8, No. IO, 37-48 (1976); 8, No. f 1, 15-24 (1976).

[3] K. Bhaskar and T. K. Varadan, A higher-order theory for bending analysis of laminated shells of revolution, Cornputers&Strucrures Vol. 40, No. 4, pp. 815-819, 1991.

[4] A. Bhimaraddi, A Higher Order Theory for Free Vibration Analysis of Circular Cylindrical Shells, Int. J. Solids Structures, 20(7): 623–630 (1984).

[5] A. Chakrabarti, Dr. S. K. Sengupta and Dr. A. H. Sheikh, Analysis of skew composite plates using a new triangular element based on higher order shear deformation theory,

[6] D. Chakravorty, J. N. Bandyopadhyay and P. K. Sinha, Finite Element Free Vibration Analysis of Doubly Curved Laminated Composite Shells, Journal of Sound and Vibration, 191(4): 491–504 (1996).

[7] D. Chakravorty, J. N. Bandyopadhyay and P. K. Sinha, Application of FEM on Free and Forced Vibration of Laminated Shells, ASCE Journal of Engineering Mechanics, 124(1): 1–8 (1998).

[8] M. Cho, K.Kim and M. Kim, Efficient Higher-order Shell Theory for Laminated Composites, Composite Structures, 34(2): 197–212 (1996).

[9] Chang-Koon Choi, A conoidal shell analysis by Modified isoparametric element, Computers and Structures Vol.18, No.5, pp.921-924, 1984.

[10] R. D. Cook, D. S. Malkus, M. E. Plesha and R. J. Witt, Concepts and applications of finite element analysis, Wiley, fourth edition.

[11] I.F.PintoCorreia, J.I.Barbosa, CristovaoM.MotaSoares and Carlos A. MotaSoares, A finite element semi-analytical model for laminated axi-symmetric shells: statics, dynamics and buckling, Computers and Structures 76 (2000) 299-317.

[12] S. B. Dong, K. S. Pister and R. L. Taylor, On the theory of laminated anisotropic shells and plates. Jouriral ofAerospace Sciences 29 (1962).

[13] S. B. Dong and F. K. W. Tso, On a laminated orthotropic shell theory including transverse shear deformation. J. Appl. Mech. 39, 1091-1096 (1972).

[14] B. Ghosh and J. N. Bandyopadhyay, Bending Analysis of Conoidal Shells using Curved Quadratic Isoparametric Element, Computers & Structures, 33(4): 717–728 (1989).

[15] B. Ghosh and J. N. Bandyopadhyay, Approximate Bending Analysis of Conoidal Shells Using the GalerkinMethod, Computers & Structures, 36(5): 801–805 (1990).

[16] S. T. Gulati and F. Essenberg, Effects of anisotropy in axisymmetric cylindrical shells. Journal of Applied

Mechanics 34, 650-666 (1967).
[17] SalilHaldar, AditiMajumdar and MihirChandar Manna, Bending of skewed cylindrical shell panels, International Journal of Computer Applications (0975-8887) Volume 1-No.8, (2010).
[18] F. B. Hildebrand, E. Reissner and G. B. Thomas, Note on the foundations of the theory of small displacements of orthotropic shells. National Advisory Comm. Aero. Tech. Notes, No. 1833 (1949).
[19] T. M. Hsu and J. T. S. Wang, A theory of laminated cylindrical shells consisting of layers of orthotropic laminae. AIAA Journal 8,(12), 2141 (1970).
[20] N. N. Huang, Influence of shear correction factors in the high&-order shear deformation laminated shell theory. Int. J. Solids Strut. 31, 1263-1227 (1994).
[21] T. Kant and R. K. Khare, A Higher-order Facet Quadrilateral Composite Shell Element, Int. J. for Numerical Methods in Engng., 40: 4477–4499 (1997).
[22] T. Kant & J. R. Kommineni, Geometrically non-linear analysis of symmetrically laminated composite and sandwich shells with a higher-order theory and C^0 finite elements, Composite Structures 27,403-418 (1994).
[23] R. K. Khare, T. Kant and A. K. Garg, Free Vibration of Composite and Sandwich Laminates with a Higher-order Facet Shell Element, Composite Structures, 65: 405–418 (2004).
[24] K. M. Liew and C. W. Lim, A Higher-order Theory for Vibration of Doubly Curved Shallow Shells, ASME, Journal of Applied Mechanics, 63: 587–593 (1996).
[25] A. I. Lure, Statics of Thin Elastic Shells. Gostekhizdat, Moscow (1947) (in Russian).
[26] Mallikarjuna and T. Kant, A General Fibre-reinforced Composite Shell Element Based on a Refined Shear Deformation Theory, Computers & Structures, 42(3): 381–388 (1992).
[27] J. S Moita, C. M. M. Soares and C. A. M. Soares, Buckling and Dynamic behavior of laminated composite structures using a discrete higher-order displacement model, Computers & Structures, 73(1-5):407-423.(1999)
[28] P. M. Naghdi, A survey of recent progress in the theory of elastic shells.,Appl. Mech. Revzews 9, No. 9,365-368 (1956).
[29] A. N. Nayak and J. N. Bandyopadhyay, Free Vibration Analysis and Design Aids of Stiffened Conoid Shells, ASCE J. Eng. Mech., 124(4): 419–427 (2002).
[30] A. N. Nayak, and J. N. Bandyopadhyay, Free Vibration Analysis of Laminated Stiffened Shells, ASCE J. Eng. Mech., 131(1): 100–105 (2003).
[31] S. Pradyumna and J. N. Bandyopadhyay, Static and Free Vibration Analyses of Laminated Shells using a Higher-order Theory, Journal of Reinforced Plastics and Composites published online 31 October 2007.
[32] J. N. Reddy, A simple Higher Order Theory for laminated composite plates, Journal of applied Mechanics, December 1984, Vol. 51/745.
[33] J. N. Reddy and C. F. Liu, A higher-order shear deformation theory of laminated elastic shells, International Journal of Engineering Science Vol. 23, No. 3, PP. 319-330, (1985).
[34] S.K. Singh, A. Chakrabarti, P. Bera, Sony J.S.D., An Efficient C^0 FE Model for the analysis of composites and sandwich laminates with general layup. Latin American Journal of Solids and Structures Vol. 8, No. 2, PP. 197-212, (2011).
[35] E. Reissner, Stress-strain relations in the theory of thin elastic shells. J. Math. Phys. 31, 109-l19 (1952).
[36] L. T. Stavridis, Dynamic Analysis of Shallow Shells of Rectangular Base, Journal of Sound and Vibration, 218(5): 861–882 (1998).
[37] J. M. Whitney and C. T. Sun, A higher order theory for extensional motion of laminated anisotropic shells and plates. J. Sound and Vibration 30, 85 (1973).
[38] J. M. Whitney and C. T. Sun, A refined theory for laminated anisotropic cylindrical shells. Journal of Applied Mechanics 41, 47 (1974).
[39] Shu Xiao-ping, An improved simple higher-order theory for laminated composite shells, Computers and Structures Vol.60, No.3, pp. 343-350, (1996).
[40] Shu X. and L. Sun, An Improved Simple Higher-order Theory for Laminated Composite Plates,Computers& Structures, 50(2), 231–236 (1994).
[41] T. Y. Yang, High Order Rectangular Shallow Shell Finite Element, Journal of the Engineering Mechanics Division, 99(EM1): 157–181(1973).

[42] Y.X. Zhang, C.H. Yan, Recent developments in finite element analysis for laminated composite plates, Composite Structures 88, 147–157, (2009).

[43] J. A. Zukas and J. R. Vinson, Laminated transversely isotropic cylindrical shells. Journal of' Applied Mechanics 38, 400-407 (1971).