ORIGINAL ARTICLE

lajss.org Latin American Journal of Solids and Structures

www.lajss.org

Shear behavior of lightweight self-consolidating reinforced concrete beams without transverse reinforcement

Sergio Luis González Garcia[a*], Caroline Vieira Lannes[b], Luiz Antônio Vieira Carneiro[c], Rancés Castillo Lara[a]

[a] Laboratorio de Engenharia Civil, Universidade Estadual do Norte Fluminense, UENF – Av. Alberto Lamego, 2000 – Parque Califórnia, Campos dos Goytacazes - RJ, Brasil. Email: liluiser@yahoo.com.br, rancescl@gmail.com
[b] Instituto Federal Fluminense, IFF - R. Dr. Siqueira, 273 - Parque Dom Bosco, Campos dos Goytacazes - RJ, Brasil. Email: cvlannes@gmail.com
[c] Universidade Federal Fluminense, UFF – R. Passo da Pátria - Gragoatá, Niterói - RJ, Brasil. Email: lavcrj@uol.com.br

* Corresponding author

http://dx.doi.org/10.1590/1679-78256040

Abstract

This article investigates the shear behavior of reinforced concrete beams without transverse reinforcement. Two types of concrete were produced: a Reference Conventional Concrete (RCC) and a Lightweight Self-Consolidating Concrete (LSCC), all with an average 28-day compressive strength (f_c) of approximately 30 MPa and characterized by rheological and mechanical tests. Twelve 15 x 30 x 200 cm beams were manufactured for shear failure during a four-point bending test. Concrete properties, longitudinal reinforcement ratios (0.89%, 1.27% and 1.68%) and shear-span to depth ratio (1.87 to 2.71) were determined. The studied beams were compared in terms of cracking pattern, diagonal cracking load, shear strength, specific concrete and longitudinal reinforcement deformation at failure. The strength values obtained experimentally were compared with ABNT NBR 6118 (2014), ACI 318 (2019) and CEN EC-2 (2004). The tested beams of LSCC showed less shear strength when compared to beams of RCC.

Keywords

Reinforced concrete beams, lightweight self-consolidating concrete, shear strength

Graphical Abstract

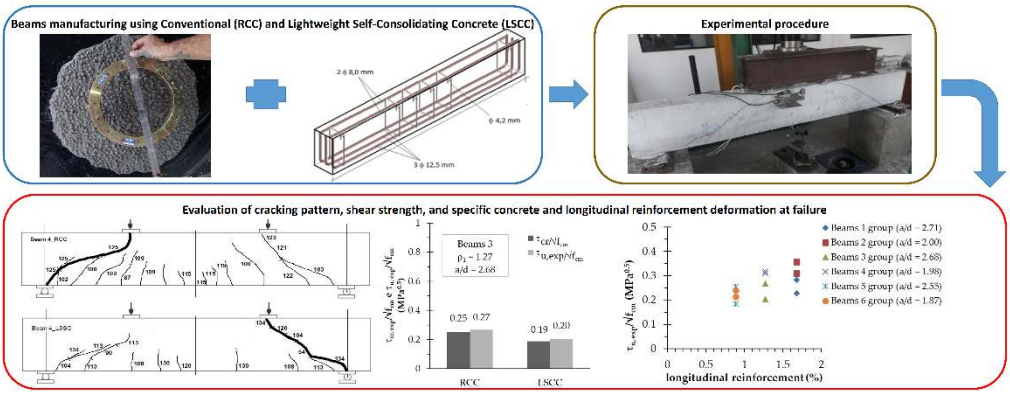

Received: March 26, 2020. In Revised Form: March 31, 2020. Accepted: May 10, 2020. Available online: May 29, 2020
https://doi.org/10.1590/1679-78256040

Latin American Journal of Solids and Structures. ISSN 1679-7825. Copyright © 2020. This is an Open Access article distributed under the terms of the Creative Commons Attribution License, which permits unrestricted use, distribution, and reproduction in any medium, provided the original work is properly cited.

1 INTRODUCTION

The self-compacting capacity of Self-Consolidating Concretes (SCC) has facilitated the manufacture of structures. These concretes have been increasingly used in recent years for numerous structural applications due to their comparable mechanical behavior and good constructability. Although studies related to their application using lightweight aggregates are relatively recent, a significant potential in terms of technological improvements for the Portland cement concrete industry is expected.

Shear failure occurs after the emergence of inclined cracks caused by a combination of shear stress, bending moment and axial stresses. However, several parameters influence this failure, including geometry, concrete strength, amount of reinforcement (longitudinal and transverse), and loading characteristics, among others. Since the shear behavior of beams is highly complex, this issue has been widely investigated. Aiming to better understanding shear structural behavior, beams made of Reference Conventional Concrete (RCC) and LSCC were produced in this work.

Structural dimensioning standards, such as ABNT NBR 6118 (2014), ACI 318 (2019) and CEN EC-2 (2004), stipulate that shear strength involves two aspects. The first refers to concrete capacity at shear (V_c), which also considers three different mechanisms (aggregate interlock, dowel action coming from longitudinal reinforcement and compressive strength of uncracked concrete) and the second is related to the transverse reinforcement (V_{sw}), placed on the beam in the form of stirrups with the main purpose of strenght shear forces. Moreover, AC ACI 318 (2019) establishes a reduction factor for LSSC in order to consider the influence of lower strength and density aggregates when compared to conventional aggregates, in addition to a factor to take into account the beam size effect.

The Brazilian ABNT NBR 6118 (2014) standard does not include the use of lightweight aggregates instead of conventional ones. According to Regan (1993), this approach, which is based on theoretical mathematical models, could be misleading since it does not offer physical explanations.

Choulli et al. (2008) experimentally described the shear behavior of prestressed SCC beams, finding a reduction in shear capacity of about 10% in relation to conventional concrete for the same compressive strength. The authors stated that same reduction was observed in the rupture module of the prestressed SCC beams, showing a direct correlation between the shear and the tensile strength of the concrete.

Hassan et al. (2010), after an experimental investigation of SCC beams, reported that the aggregate interlock mechanism influences shear strength and cracking. They also demonstrated that beam dimensions affect vertical displacements and concluded that the shear strength, after diagonal cracking and the ductility of SCC beams, was lower than results from conventional concrete.

Juan (2011) noted that shear strength is directly influenced by concrete compressive strength and longitudinal reinforcement ratio, because the dowel action prevents cracks from opening, thereby increasing the shear strength of lightweight concrete beams.

Arezoumandi and Volz (2013) conducted an experimental investigation to compare the shear strength of full-scale beams constructed with chemically-based, self-consolidating concrete (SCC) with conventional concrete (CC). The authors found that chemically-based SCC beams showed comparable shear strength as CC beams.

Using a mathematical model for prestressed SCC beams, Cladera et al. (2016) demonstrated the significant contribution of the non-cracked compressed block in the shear strength of beams with and without transverse reinforcement.

Sathiyamoorthy (2016) investigated the influence of shear-span-to effective depth ratio (a/d) on the shear strength (V_c) of LSCC beams and concluded that the V_c portion decreases when a/d increases.

Zhenpeng et al (2019) conducted one of the lasts LSCC researches aimed at evaluation multi-axial stress states. The results show that when the uniaxial compression and lateral stress values of LSCC are small, the biaxial compression-pressure failure morphology mainly exhibits the shear failure morphology, which is different from that of conventional concrete and lightweight aggregate concrete.

These recent studies demonstrate the need to better understand the important structural design parameters of elements made with LSCC.

2 SHEAR RESISTANCE MECHANISMS

In uncracked concrete structures, shear strength derives from concrete tensile strength and alternative resistance mechanisms. The primary shear resistance mechanisms are the uncracked compressive zone of the concrete, physical models (“beam action” and “arch action”), friction between crack surfaces because of aggregate interlock, dowel action of longitudinal reinforcement, and residual tensile stress on cracks. However, according to Savaris and Pinto (2019), the degree of importance of each of these mechanisms to shear strength is a controversial topic.

The parameters generally considered the main contributors to shear strength in the cracks of beams without transverse reinforcement are schematically represented in Figure 1.

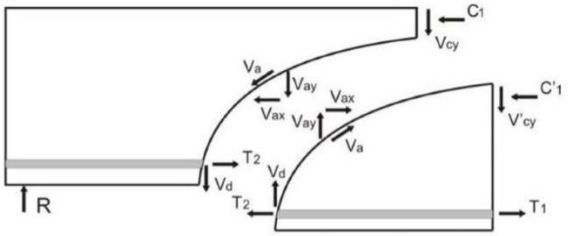

Figure 1 Internal forces of a cracked beam without transverse reinforcement after the emergence of the inclined critical crack, according to Macgregor et al. (1997).

According to MacGregor et al. (1997), when the inclined critical crack appears, shear strength is transferred to different portions: the uncracked concrete in the compressed zone (V_{cy}), the aggregate interlock (V_a) on the two surfaces of the crack and the dowel action of longitudinal reinforcement (V_d). As the crack widens, the V_a portion decreases and the other two relatively increase. When the V_d portion causes concrete splitting in the longitudinal reinforcement, the Vd portion decreases and Vcy increases, until the resistant capacity of the compressed zone is exhausted.

Shear dimensioning of reinforced concrete beams is established in ABNT NBR 6118 (2014), where the truss model is considered and a "corrective term" (V_c) is added for concretes with compressive strength between 20 and 90 MPa. In this code, shear strength can be determined by selecting model I or model II. Model I allows 45° inclined compressive diagonals in relation to the longitudinal axis of the beam and assumes that the complementary portion V_c has a constant value, instead of the shear strength obtained from calculations. For model I, concrete diagonal compression is determined by Equation (1).

$$V_{Rd2} = 0.27\alpha_{v2} f_{cd} b_w d \tag{1}$$

The V_c portion of model I assumes a V_{c0} value in simple bending, expressed by Equation (2):

$$V_c = 0.6 f_{ctd} b_w d \tag{2}$$

where $f_{ctd} = f_{ctk,inf}/\gamma_c$, $f_{ctk,inf} = 0.21\sqrt[3]{f_{ck}^2}$ and α_{v2} is a dimensionless coefficient that represents the concrete fragility index, given by $1\text{-}f_{ck}/250$.

ACI 318 (2019) establishes a formulation for dimensioning concrete beams at shear that is valid for concretes with compressive strength under 70 MPa. The procedure is also based on the truss model, where the compressed strut inclination angle is 45° and a concrete strength portion (V_c), given by Equation (3), is considered. The excess shear force portion (V_{sd}-V_c) is supported by the transverse reinforcement (V_{sw}):

$$V_c = \left[0.7\lambda\lambda_s \left(\rho_w\right)^{\frac{1}{3}} \sqrt{f_c'}\right] b_w d \tag{3}$$

where λ is a shear strength reduction factor 0.85 for concretes with lightweight coarse aggregates, $\lambda_s = \sqrt{2}/(1+d/10) < 1{,}0$ is the coefficient that takes into account the size effect, f'_c concrete compressive strength in MPa e ρ_s the longitudinal reinforcement ratio.

CEN EC-2 (2004) covers concretes with compressive strength up to 90 MPa and suggests that the shear strength of concrete beams is also based on a truss model, with concrete strut inclined between 21.8° and 45°. When dealing with structural elements without transverse reinforcement, this standard considers concrete shear strength (V_c) according to Equation (4):

$$V_c = 0.18k\sqrt[3]{100\rho_s f_c}b_w d \quad (4)$$

where k=1+√200/d (size effect factor) and ρ_s is the longitudinal reinforcement ratio.

3 EXPERIMENTAL PROGRAM

The experimental program aimed at gathering information about shear strength in LSCC beams, when compared to RCC beams, investigating the influence of concrete properties, longitudinal reinforcement ratio and shear-span-to depth ratio (a/d) on strength.

For concrete manufacturing, a high early strength Portland cement was used, classified as Type V according to Brazilian standard ABNT NBR 5733 (1991). Natural quartz river sand and gneiss crushed rock were used as fine and coarse aggregates respectively. Commercially available fly ash, was used as mineral admixture for LSCC concrete mixtures. Expanded clay, with maximum particle diameter of 12.5 mm, was employed for LSCC as coarse aggregates substitute. Polycarboxylate-based superplasticizer (PLASTOL 6040, VIAPOL, Brazil) with 1080 kg/m3 density and 40% solid content was also used for self-compacting concrete (LSSC) in order to obtain a desired slump according to that classification.

Concrete mixtures are presented in Table 1, which were initially selected because of their 28-day average compressive strength (approximately 30 MPa) and fresh state properties, which agree with the objectives of this study.

Table 1 Composition of concretes.

Type of Concrete	Material consumption (kg/m³)							
	Cement	Fly ash	Sand	Coarse Aggregate	Expanded clay	Water	SP	w/c
RCC	329	-	740	1069	-	191	-	0.58
LSCC	329	141	778.6	-	280	188.5	8.9	0.60

SP – superplasticizer

The tests used for concrete characterization at fresh state were the slump test for RCC and the flow table test, J-ring, L-box, U-box and V-funnel for LSCC. All tests, including casting and curing concrete specimens, were conducted at the Civil Engineering Laboratory (LECIV) of North Fluminense State University (UENF), Rio de Janeiro, Brazil.

Twelve simply supported beams were manufactured for this study, submitted to a four-point bending test and grouped according to Table 2.

Table 2 Properties of the tested beams.

Beams	Type of concrete	ρ_s (%)		As	a/d	Nomenclature
1	RCC LSSC	ρ_1	1.68	1 ϕ 10.0 5 ϕ 12.5	2.71	Beam 1_RCC Beam 1_LSSC
2	RCC LSSC	ρ_2	1.27	2 ϕ 10.0 3 ϕ 12.5	2.00	Beam 2_RCC Beam 2_LSSC
3	RCC LSSC	ρ_3	0.89	3 ϕ 12.5	2.68	Beam 3_RCC Beam 3_LSSC
4	RCC LSSC	ρ_1	1.68	1 ϕ 10.0 5 ϕ 12.5	1.98	Beam 4_RCC Beam 4_LSSC
5	RCC LSSC	ρ_2	1.27	2 ϕ 10.0 3 ϕ 12.5	2.55	Beam 5_RCC Beam 5_LSSC
6	RCC LSSC	ρ_3	0.89	3 ϕ 12.5	1.87	Beam 6_RCC Beam 6_LSSC

The longitudinal reinforcement ratio ρ_1, ρ_2 and ρ_3 have a nominal section (mm²) of 692.0; 525.1; 368.1 and total perimeter (mm) of 227.8; 180.6 and 117.8, respectively.

The ABNT NBR 6118 (2014) calculation procedure was used for flexural dimensioning. Three longitudinal reinforcement ratios were chosen based on the balanced reinforcement ratio (ρ_s/ρ_b), resulting in different contributions

from the dowel action of longitudinal reinforcement to the shear capacity of the beams under study. Longitudinal and transverse complementary reinforcement values are depicted in Figure 2.

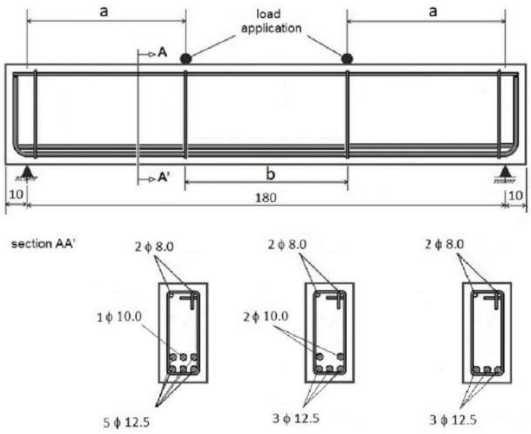

Figure 2 Detailing of beam reinforcement. For the beams 1, 3 and 5, a = 67.5 cm, b = 45.0 cm and reinforcement in the midspan of 4 ϕ 4.2 mm, while for beams 2, 4 and 6, a = 50.0 cm, b = 80.0 cm and reinforcement in the midspan of the 6 ϕ 4.2 mm.

The wooden molds for RCC beams was continually filled with concrete and vibrated for consolidation. Due to its flow capacity through the molds and reinforcements, the LSCC mixture was cast along the entire length of the beams without mechanical consolidation.

All simply supported 200 cm-long beams had a 15 x 30 x 200 cm rectangular cross-section, with 180 cm between supports. Loading consisted of two concentrated and equidistant loads from midspan. Structural tests were performed using a steel frame with a 244.41 hydraulic actuator, coupled to a 500 kN capacity load cell (MTS®). The system was commanded by the hydraulic unit, which recorded the applied load in real time at a 2 Hz frequency. Figure 3 presents a schematic diagram of a beam test.

Longitudinal reinforcement strain values were obtained by means of uniaxial strain gages, with 120-Ω resistance, and placed on the central bars of longitudinal reinforcements. A Gefran® Linear Variable Differential Transducer (LVDT) was installed at the midpoint of the beams, with a 100 mm track, for vertical displacement (deflections) monitoring during load application. Another LVDT was also placed above the neutral axis of each beam, 30 mm from the upper surface, for concrete strain readings.

Load was applied using a hydraulic actuator coupled to a load cell, with 100 N/s load increases until failure. The cracks were marked after each 10 kN of applied load.

For characterization in the hardened state, cylindrical specimens (diameter=50 mm and height=100 mm) were removed from the beams. This procedure was conducted according to ABNT NBR 5739 (2018). Next, the compressive strength and tensile strength of concrete was evaluated using a SHIMADZU 500 KNI universal testing machine with 500 kN maximum capacity and 0.5 MPa/s loading ratio.

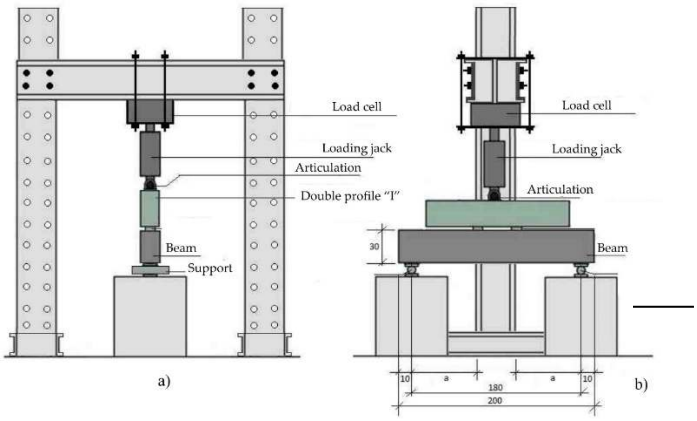

Figure 3 Test schematic, (a) front and (b) side view.

4 EXPERIMENTAL RESULTS

Table 3 presents the fresh state properties of the concretes, obtained from slump tests (RCC), the flow table, J-ring, V-funnel, L-box and U-box (LSCC).

Table 3 Concrete properties in the fresh state.

Type of concrete	Slump (mm)	Spreading (mm)	T500 (s)	J-ring (mm)	V-funnel (s)	L-box (H2/H1)	U-box (mm)
RCC	35	-	-	-	-	-	-
LSCC	-	650	5.0	41	7.1	0.80	70
Classification	S10 and S50	SF2	VS2	PJ2	VF1	PL2	-

According to slump test results, RCC mixture was classified as S10, following the Brazilian standard ABNT NBR NM 67 (1998) and mechanical consolidation was needed to completely fill the molds. According to ABNT NBR 15823 (2017), all fresh state requirements were met, showing that the LSCC mixture exhibited good fluidity and viscosity. As consequence, LSCC was able to pass through reinforcements and demonstrated good finishing.

Regarding results at hardened state, average compressive strength values of concrete cores removed from the beams are shown in Table 4.

Table 4 Compressive and tensile strength of beams samples.

Type of concrete	Cylindrical concrete specimens			
	Age (days)	Number of specimens	Compressive strength f_{cm} (MPa)	Tensile strength of concrete f_{ctm} (MPa)
RCC	468	6	28.7	3.5
LSCC	339	6	31.4	2.9

Table 5 presents the maximum shear force (V_u), diagonal cracking shear force (V_{cr}), diagonal cracking shear stress ($\tau_{cr}=V_{cr}/b_wd$), shear strength ($\tau_u=V_u/b_wd$) and normalized strength of each tested beam, as well as the shear strength differences of diagonal cracking and last normalized of the LSCC beams in relation to the RCC beams.

Table 5 Experimental results of the tested beams.

Beams	V_{cr} (kN)	V_u (kN)	τ_{cr} (MPa)	τ_u (MPa)	$\tau_{cr}/\sqrt{f_{cm}}$ ($MPa^{0.5}$)	$\tau_u/\sqrt{f_{cm}}$ ($MPa^{0.5}$)	I(%)	II(%)	III(%)
1_RCC	50.0	56.5	1.34	1.51	0.25	0.28	10.7	12.0	17.9
1_LSCC	45.0	47.5	1.22	1.27	0.22	0.23	4.3		
2_RCC	65.0	71.4	1.74	1.91	0.32	0.36	11.1	9.4	13.9
2_LSCC	60.0	64.8	1.61	1.73	0.29	0.31	6.5		
3_RCC	51.0	54.2	1.35	1.43	0.25	0.27	7.4	24.0	25.9
3_LSCC	40.0	43.1	1.06	1.14	0.19	0.20	5.0		
4_RCC	60.5	62.7	1.60	1.66	0.30	0.31	3.2	6.7	-3.2
4_LSCC	60.0	67.2	1.59	1.78	0.28	0.32	12.5		
5_RCC	52.5	54.1	1.32	1.36	0.25	0.25	0.0	32.0	28.0
5_LSCC	37.0	41.0	0.93	1.03	0.17	0.18	5.6		
6_RCC	50.0	51.1	1.26	1.29	0.24	0.24	0.0	16.7	12.5
6_LSCC	45.0	47.5	1.13	1.20	0.20	0.21	1.1		
Average							11.2	16.8	15.8
Standard deviation							4.3	9.6	11.2

where, $I(\%) = \dfrac{\dfrac{\tau_u}{\sqrt{f_{cm}}} - \dfrac{\tau_{cr}}{\sqrt{f_{cm}}}}{\dfrac{\tau_u}{\sqrt{f_{cm}}}}$, $II(\%) = \dfrac{\dfrac{\tau_{cr,RCC}}{\sqrt{f_{cm}}} - \dfrac{\tau_{cr,LSCC}}{\sqrt{f_{cm}}}}{\dfrac{\tau_{cr,RCC}}{\sqrt{f_{cm}}}}$, $III(\%) = \dfrac{\dfrac{\tau_{u,RCC}}{\sqrt{f_{cm}}} - \dfrac{\tau_{u,LSCC}}{\sqrt{f_{cm}}}}{\dfrac{\tau_{u,RCC}}{\sqrt{f_{cm}}}}$,

The maximum theoretical shear load of the beams was obtained according to the above mentioned expressions from ABNT NBR 6118 (2014), ACI 318 (2019) and CEN EC-2 (2004), considering the unit safety factors, as shown in Table 6.

Table 6 Relationship between experimental results and maximum theoretical shear force of the tested beams.

Beams	$V_u/V_{u,theo}$		
	ABNT NBR 6118 (2014)	ACI 318 (2019)	CEN EC-2 (2004)
1_RCC	1.28	1.18	1.30
2_RCC	1.62	1.49	1.64
3_RCC	1.21	1.22	1.35
4_RCC	1.40	1.42	1.57
5_RCC	1.16	1.31	1.48
6_RCC	1.09	1.24	1.39
1_LSCC	1.01	0.95	1.06
2_LSCC	1.38	1.29	1.44
3_LSCC	0.91	0.93	1.05
4_LSCC	1.42	1.45	1.63
5_LSCC	0.82	0.95	1.09
6_LSCC	0.95	1.10	1.26

During structural tests, flexural cracking was initially seen at the midspan of the beams, which spread vertically with increasing loads. Cracks with a slight inclination were also observed in shear zones due to the interaction between normal and shear stresses.

In the final stages of loading, an inclined crack formed suddenly in one of the shear spans, rapidly spreading towards the load application point and supports, followed by sudden failure on one side of the beam. Schematic diagrams of beams cracking of the beams tested, are shown in Figure 4.

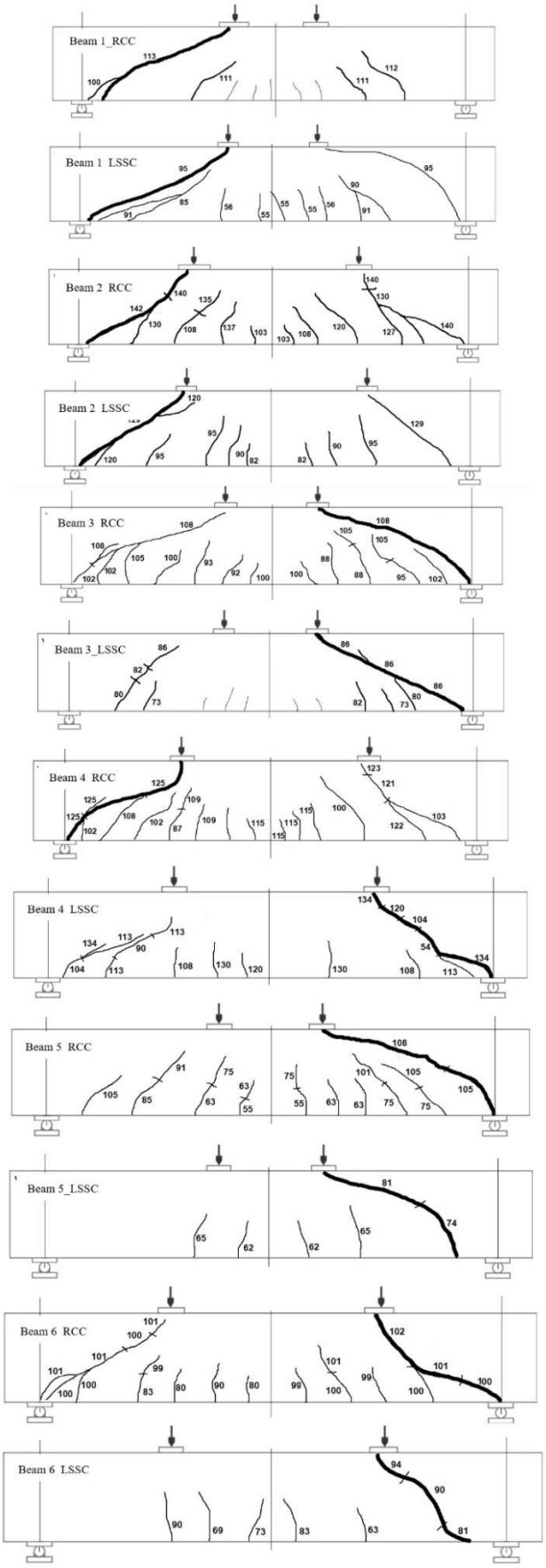

Figure 4 Cracking schematic of tested beams.

A regular cracking pattern was not observed on LSCC beams, when compared to RCC beams. The same behavior was found by Hassan et al. (2010), who reported general similarity between conventional concrete and SCC beams in terms of crack width, crack height, crack angles and overall failure mode.

Choulli et al. (2008) also observed in their research that the prestressed SCC beams showed a very similar crack pattern when compared to conventional concrete, but with narrower cracks and smoother surfaces.

In all cases, the first shearing crack occurred earlier in the LSCC beams, despite a higher compressive strength in comparison to SCC beams. Such behavior demonstratio that the shearing performance is not proportional to the compressive strength, a fact that has been proven in previous studies. Results also showed that the LSCC has less resistance to the last shear, with an average value of 15.8%, compared to the SCC. Similar results were found by Choulli et al. (2008), where shear strength of prestressed SCC beams was reduced in values between 12% and 18%.

Table 7 shows vertical displacement (Δ) and the specific strain of compressed concrete (ε_c), measured at midspan 30 mm from the beam's upper surface, and longitudinal reinforcement strain (ε_s), measured 25 mm from the beam's bottom surface, at imminent beam shear failure. In some cases, readings were not taken due to strain gage problems.

Figure 5 shows the load vs vertical displacement curves of two tested beams, with same longitudinal reinforcement ratio (1.68%) and different shear-span-to depth ratio (2.71 and 1.98).

Table 7 Beam displacement and strain.

Beams	V_u (kN)	Δ (mm)	ε_c (‰)	ε_s (‰)
1_RCC	56.5	2.51	0.51	1.30
2_RCC	71.4	3.71	0.50	0.85
3_RCC	54.2	3.20	0.50	1.60
4_RCC	62.7	2.53	0.30	0.60
5_RCC	54.1	1.36	0.80	2.99
6_RCC	51.1	2.83	0.10	1.46
1_LSCC	47.5	6.13	0.60	0.48
2_LSCC	64.8	6.68	0.80	1.16
3_LSCC	43.1	-	0.20	1.20
4_LSCC	67.2	3.77	1.12	1.57
5_LSCC	41.0	1.48	1.10	1.45
6_LSCC	47.5	2.42	0.50	2.33

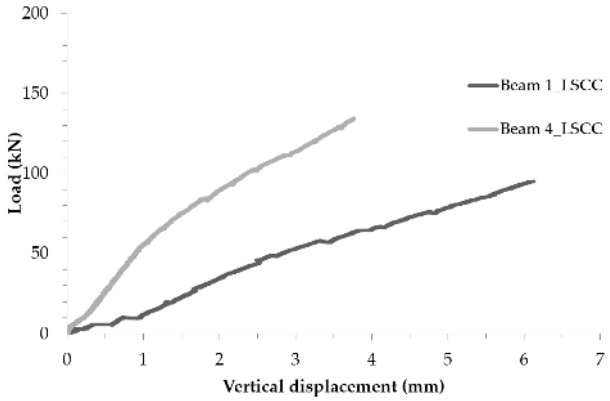

Figure 5 Load vs vertical displacement curves of two-tested LSCC beams.

5 RESULTS ANALYSIS

The concrete consolidation effect can be evaluated by comparing the experimental values of τ_{cr} and τ_u normalized by $\sqrt{f_{cm}}$ in vibrated concretes (RCC) with those obtained in LSCC, shown in Figure 6. An average reduction in diagonal cracking shear stress values and ultimate shear strength of approximately 16.8% and 15.8% were found in LSCC beams when compared to RCC beams.

Figure 7 shows normalized experimental shear strength values depending on the longitudinal reinforcement ratio of all the tested beams.

In general, ultimate shear strength values increased with a decline in the a/d ratio and a rise in the longitudinal reinforcement ratio of the beams, regardless of concrete type. This behavior is a consequence of arch action, which tends to raise the shear strength of the beam. Groups of beams showed the same longitudinal reinforcement ratio and similar concrete compressive strength, with only load position on the supports differing.

Sathiyamoorthy (2016) also investigated the influence of a/d ratio on the shear strength of LSCC beams with blast furnace slag lightweight aggregates without transverse reinforcement. The author concluded that the shear strength of beams decreased considerably with an increase in the a/d ratio.

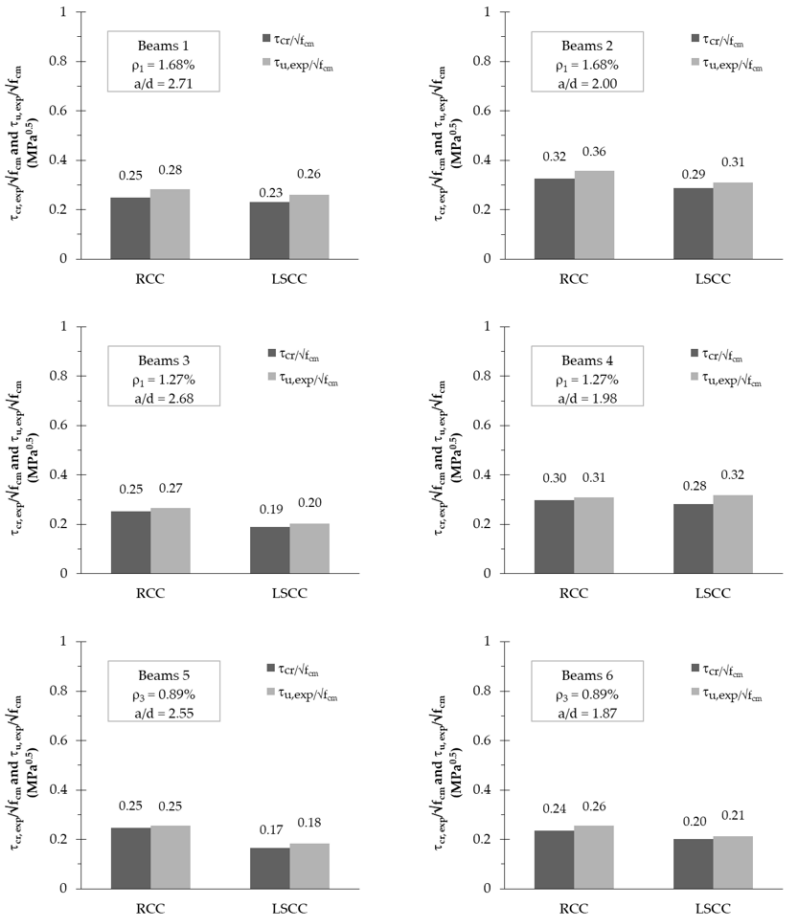

Figure 6 Comparison of Experimental values of τ_{cr} and τ_u normalized by $\sqrt{f_{cm}}$ in vibrated concretes (RCC) with those obtained in LSCC tested beams.

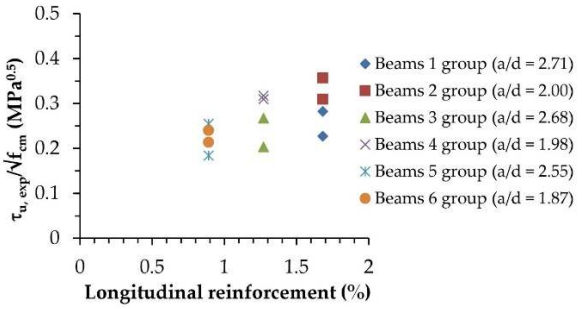

Figure 7 Influence of shear-span to depth ratio a/d and ρ_s on normalized shear strength of tested beams.

When the longitudinal reinforcement ratio was evaluated separately for each concrete type, it was possible to determine RCC behavior, where beams with a lower longitudinal reinforcement ratio result in lower shear strength, due to the decreased contribution of the dowel action portion, as shown in Figure 8.

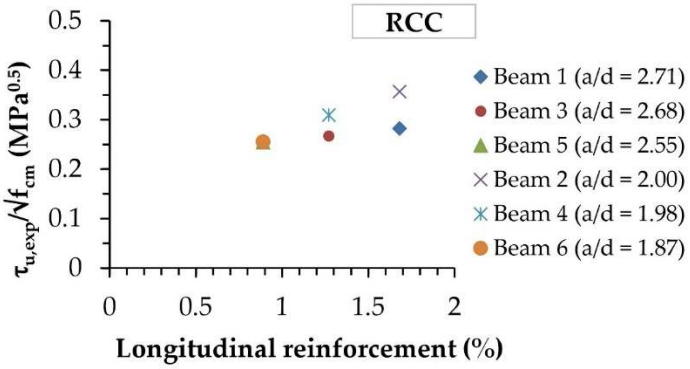

Figure 8 Influence of shear-span to depth ratio a/d on shear strength with a variation in the longitudinal reinforcement ratio for RCC beams.

Figure 9 shows the results for LSCC beams, whose trend is similar to that of RCC beams, with lower shear strength.

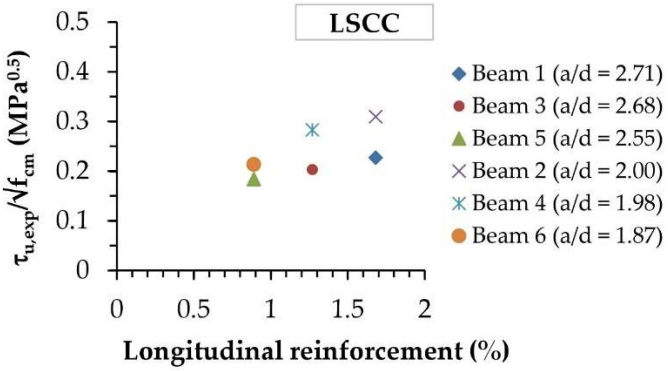

Figure 9 Influence of shear-span to depth ratio a/d on ultimate shear strength with a variation in longitudinal reinforcement ratio for LSCC beams.

Experimental beam shear strength results were compared with the estimated values of standards related to dimensioning of reinforced concrete structures, such as ABNT NBR 6118 (2014), ACI 318 (2019) and CEN EC-2 (2004), considering the unit strength-reduction factors.

Figure 10 shows the relation between experimental normalized shear strengths and those calculated by the standards. The average values obtained were between 1.08 and 1.46, with coefficients of variation of about 9% and 23%, suggesting conservative formulations for estimated beam shear strength (see Table 8).

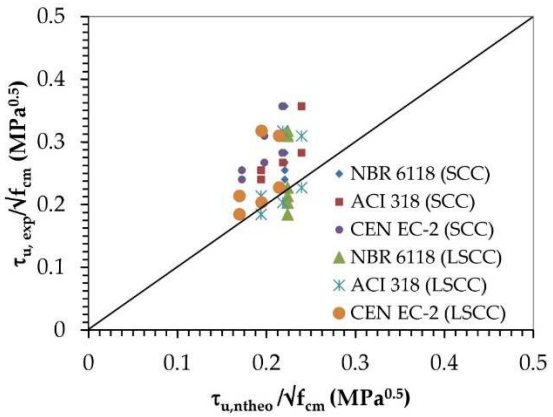

Figure 10 Relationship between normalized experimental and theoretical shear strength obtained using different standards.

Calculations using ACI 318 (2019) resulted in less conservative values, as it considers relevant factors, such as for to take into account the use of lightweight aggregates and the effect of beam size, making its results closest to experimental values.

Results that are more conservative were found using CEN EC-2 (2004) prescriptions, in comparison with to ACI 318 (2019), even for the case of LSCC beams.

Table 8 Statistical parameters.

Standards		$(\tau_{u,exp.}/\tau_{u,theo})$	Standard deviation	Coefficient of variation
ABNT NBR 6118 (2014)	SCC	1.29	0.19	14.90
	LSCC	1.08	0.25	23.39
ACI 318 (2019)	SCC	1.31	0.12	9.26
	LSCC	1.11	0.22	19.48
CEN EC-2 (2004)	SCC	1.46	0.13	9.01
	LSCC	1.25	0.24	19.14

Among the standards previously considered, Brazilian ABNT NBR 6118 (2014)provided the least conservative values for beam dimensioning at shear stress, regardless of concrete type. Thus, the standards should be reviewed or amended, especially when dealing with lightweight aggregates.

6 CONCLUSIONS

An experimental program was developed to investigate the influence of concrete type, longitudinal reinforcement ratio (ρ_s) and shear-span-to depth ratio (a/d) on the shear strength of reinforced concrete beams without transverse reinforcement. To evaluate the influence of concrete type, two compositions were prepared, one exhibiting characteristics of a conventional vibrated concrete (RCC), another lightweight, but exhibiting self-compacting characteristics (LSCC).

According to the experimental results and comparisons between the concretes, the following conclusions can be drawn:

- during fresh state characterization, LSCC was classified as a self-compacting concrete, according to ABNT NBR 15823 (2017). In the hardened state, its mechanical performance qualified it for use in several areas of the construction industry;
- the average value of maximum shear strength of LSCC beams was 15.8% lower than RCC beams. This may be attributed to the type of coarse aggregate (expanded clay) and the reduction in coarse aggregate volume used in its composition, lowering the strength portion related to aggregate interlock;
- the higher specific strains (compressed concrete and longitudinal tension reinforcement) were found in the cross sections of beams with an shear-span-to depth ratio a/d of 2.71, confirming the “beam action”, which reduced shear strength when compared to beams with an shear-span-to depth ratio a/d of 1.87, the latter showing higher strength due to the influence of “arch action”;
- the shear strength of beams was directly influenced by the longitudinal reinforcement ratio, as a consequence of the dowel action, regardless of concrete type or shear-span-to depth ratio a/d, that is, the higher the longitudinal reinforcement ratio, the higher the shear strength of the beam;
- as expected, LSCC beams showed lower shear strength when compared to their RCC, confirming the need for greater investigation and attention to beam dimensioning using this material and technology;
- ACI 318 (2019) was less conservative for beam dimensioning at shear stress, regardless of concrete type. Nevertheless, this standard was less conservative when dealing with LSCC, followed by CEN EC-2 (2004);
- ABNT NBR 6118 (2014) displayed less conservative results when compared to the others, especially LSCC beams.

Author’s Contribuitions: Conceptualization, SLG Garcia, CV Lannes, LAV Carneiro and RC Lara; Methodology, SLG Garcia, CV Lannes; Investigation, SLG Garcia, CV Lannes; Writing - original draft, SLG Garcia, CV Lannes; Writing - review & editing, SLG Garcia, CV Lannes, LAV Carneiro and RC Lara; Funding acquisition, SLG Garcia, CV Lannes LAV, Carneiro and RC Lara; Resources, SLG Garcia, CV Lannes LAV, Carneiro and RC Lara; Supervision, SLG Garcia.

Editor: Marcílio Alves.

References

ACI COMMITTEE 318. (2019). 318-19, Building Code Requirements for Structural Concrete and Commentary. In Technical Documents.

Arezoumandi, M., Volz, J. F. (2013). An experimental study on shear strength of chemically-based self-consolidating concrete. International Journal of Concrete Structures and Materials, 7(4), 73-285.

ASSOCIAÇÃO BRASILEIRA DE NORMAS TÉCNICAS (1991). NBR 5733, High early strength Portland cement - Specification. Rio de Janeiro.

ASSOCIAÇÃO BRASILEIRA DE NORMAS TÉCNICAS (1998). NBR NM 67, Concrete - Slump test for determination of the consistency. Rio de Janeiro.

ASSOCIAÇÃO BRASILEIRA DE NORMAS TÉCNICAS (2014). NBR 6118, Projeto de estruturas de concreto –procedimento, Rio de Janeiro.

ASSOCIAÇÃO BRASILEIRA DE NORMAS TÉCNICAS (2017). NBR 15823, Self-consolidating concrete. Rio de Janeiro.

ASSOCIAÇÃO BRASILEIRA DE NORMAS TÉCNICAS (2018). NBR 5739, Concreto — Ensaio de compressão de corpos de prova cilíndricos. Rio de Janeiro.

Choulli, Y.; Cladera, A., Mari, A. R. (2008). Shear behaviour of full-scale prestressed i-beams made with self compacting concrete. Materials and Structures, 41(1), 131-141.

Cladera, A., Mari, A. R., Bairan J. M., Ribas C., Oller, E., Duarte, N. (2016). The compression chord capacity model for the shear design and assessment of reinforced and prestressed concrete beams. Structural Concrete, 17(6), 1017-1032.

EUROPEAN COMMITTEE FOR STANDARDIZATION. (2004). Eurocode 2: Design of concrete structures–Part 1-1: General rules and rules for buildings. In European Committee for Standardization (CEN).

Hassan, A. A. A., Hossain, K. M. A., & Lachemi, M. (2010). Strength, cracking and deflection performance of large-scale self-consolidating concrete beams subjected to shear failure. Engineering Structures, 32(5), 1262–1271.

Juan, K. (2011). Cracking Mode and Shear Strength of Lightweight Concrete Beams, Ph.D. Thesis (English) National University, Singapore, Singapore.

MacGregor, J. G., Wight, J. K., Teng, S., & Irawan, P. (1997). Reinforced concrete: Mechanics and design (3ª edition), Prentice Hall Upper Saddle River (New York).

Regan, P. E. (1993). Research on shear: a benefit to humanity or a waste of time? Structural Engineer, 71(19).

Sathiyamoorthy, K. (2016). Shear and Flexural Behaviour of Lightweight Self-Consolidating Concrete Beams. MSc. Thesis (English) Ryerson University, Canada

Savaris, G., Pinto R. C. A. (2019). Experimental investigation on shear resistance of self-consolidating concrete beams. IBRACON Structures and Materials Journal, 12(6), 1305-1326.

Zhenpeng, Y., Rui, T., Peng, C., Qiao, H., Xinghua, X., Feiting, S. (2019). Multi-axial test and failure criterion analysis on self-compactinglightweight aggregate concrete. Construction and Building Materials, 215, 786-798.