ORIGINAL ARTICLE

lajss.org Latin American Journal of Solids and Structures

www.lajss.org

Firearm's Percussion Ignition System Performance: Influencing Factors and Sensitivity Analysis

Yongbo Yu[a], Zhifang Wei[a]*, Yirui Li[b], Xiucheng Hou[a], Changfan Xin[a]

[a]College of Mechatronics Engineering, North University of China, Taiyuan 030051, China; Email: yyb_1999@163.com; wzhifang@nuc.edu.cn; ty13hxc@gmail.com; nuc_2008@yeah.net
[b]NO.208 Research Institute of China Ordnance Industries, Changping District, Beijing 102202, China; Email: lyryqd@126.com

*Corresponding author

https://doi.org/10.1590/1679-78258070

Abstract

Normal firing of the percussion ignition system is essential to the reliable operation of firearms. Percussion energy, critical dimension, and assembly parameters all have a significant impact on a firearm's percussion ignition performance. This study was intended to reveal how various factors influenced a firearm's percussion ignition performance. The percussion ignition process of a small-caliber automatic rifle was simulated in this paper by conducting pressure measurement tests for the entire cartridge to obtain the gas pressure response. A finite element model was built to study the firearm's percussion ignition performance. The simulation parameters were calibrated based on experimental results, and the accuracy of the simulation model was verified. Local sensitivity analysis was carried out for each influencing factor using the control variable method. Global sensitivity analysis was conducted based on the optimal Latin hypercube design that accounted for coupling effects between the influencing factors. The results show: Hammer's falling height has the greatest influence on the firing ignition performance. The primer seating depth has the least effect on the firing ignition performance. This article can provide technical support for improving the design of the percussion and ignition system of the firearm and improving the reliability of the percussion and ignition.

Keywords

Firearm; Percussion ignition; Numerical simulation; Pareto chart; Sensitivity analysis

Graphical Abstract

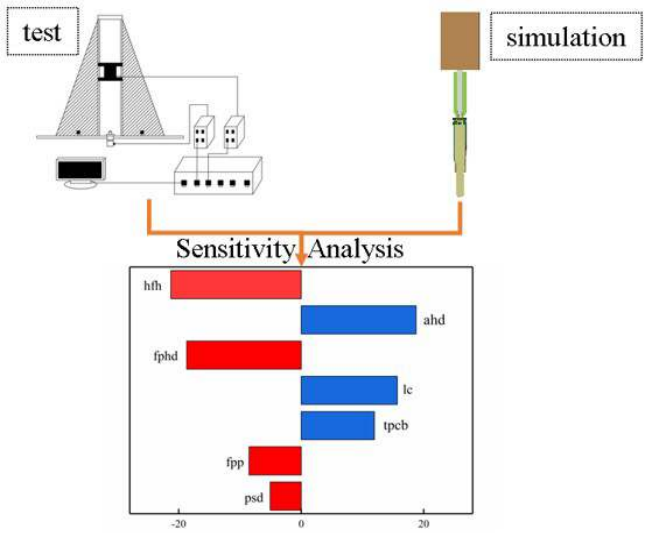

Received: February 28, 2024. In revised form: May 22, 2024. Accepted: June 05, 2024. Available online: June 11, 2024
https://doi.org/10.1590/1679-78258070

Latin American Journal of Solids and Structures. ISSN 1679-7825. Copyright © 2024. This is an Open Access article distributed under the terms of the Creative Commons Attribution License, which permits unrestricted use, distribution, and reproduction in any medium, provided the original work is properly cited.

1 INTRODUCTION

The percussion ignition system of firearms is mainly composed of the firing mechanism, primer, and casing and works as follows: After the trigger is pulled, the resistance iron releases the drop weight that strikes the firing pin under the action of a spring. The firing pin then punches the primer, causing deformation of the primer cup and crushing the percussion composition against the anvil. As a result, the percussion composition is ignited under squeezing and friction. The flame passes through the flash hole into the powder chamber, where the powder burns rapidly to generate many gases. The intensity of pressure within the chamber rises rapidly, propelling the bullet out of the cartridge (Cai R. J. 1999).

A firearm's percussion ignition performance has a large bearing on whether the primer can be ignited and outputs energy sufficient to ignite the powder. This, in turn, determines whether the bullet can be successfully shot and with high precision. The percussion ignition performance is influenced by a variety of factors, including those related to the design & manufacture, assembly process, and combat environment. Identifying the influencing factors of percussion ignition performance and the influence degree of each factor are prerequisites for reliability analysis and control of percussion ignition (Wang Y. J. 2014). A study on the influencing factors of the firearm's percussion ignition performance and a sensitivity analysis of the influencing factors are critical to ensure the percussion ignition performance.

To quantify the firing performance of such a system, many researchers have experimented with various methods to test the primer output. Xu et al. (Xu J. G et al. 2010) designed a primer energy test device that could reliably assess primer's performance, laying down a basis for assessing the quality condition of ammunition in store. Zhu (Zhu Y. L. 2014) designed a miniature adiabatic closed explosion vessel to measure the primer's firing performance. This device was then used for experimental measurements of primer samples under high, low, and room temperatures, from which pressure variations within the closed vessel over time were obtained. Wang et al. (Wang L. F et al. 2001) designed a testing device for the cartridge's primer and determined the performance of the press-loading small primer, which was fixed ammunition. Evans (Evans, N A, and Brezowski, C F. 1990) and Yong (Yong, L.V. 1985) used thermocouples to measure the temperature of a copper sheet hit by energy released by the M24 primer after the impact to estimate the heat flux released instantaneously by the primer. Liu et al. (Liu W. Q et al. 2007) proposed a testing device for the primer's output pressure and temperature, which can be used to measure the firing reliability and the characteristic parameters of output energy of various types of primers. Their design offers a valuable tool for assessing primer performance. Wang et al. (Wang H et al. 1999) experimented with different charge materials, loading densities, and ignition energies on a flame transfer simulation test device for igniter tubes. They obtained the pressure-time curves and flame transfer rates at different positions and analyzed the transfer characteristics of flame from the primer in the charge bed of the igniter tube filled with a consolidated charge.

Huang et al. (Huang H. K et al. 2004) reviewed several methods available for measuring primer's output energy at home and abroad: Pressure measurement method, optical measurement method, and mechanical energy output measurement method. They proposed a comprehensive quantitative test for primer's output energy based on the principles of a closed explosion vessel. Zhao et al. (Zhao C. C et al. 2022) attempted to reveal the firing mechanism of firearms and studied the mechanism of percussion ignition failure of firearms. For this purpose, they designed a simulation test device for the percussion ignition system and performed a quantitative assessment of the firing performance of the firearms. Frank et al. (Frank J. V. 2002) used a close explosion vessel to measure the maximum pressure after primer ignition and obtained the primer pressure-time curve. Lundgaard et al. (Lundgaard S et al. 2019) analyzed the new-generation primer materials and the ignition control mechanism to resolve the risks associated with firearms. Based on recent developments, they further discussed the broad application prospects of low-cost, safe, reliable, and non-toxic primers. Li et al. (Li L. C and Ye Z. Q. 1997) introduced the structure of the series 35 primer and analyzed factors influencing the primer's firing sensitivity. They determined the tetrazine content of the percussion composition and conducted an impact sensitivity analysis of the primer. Ge et al. (Ge T., Jia Z. H and Zhou K. D 2008) proposed a new method that used primer cup deformation to estimate the percussion energy. This method simplified the design calculation of the rifle's firing mechanism. Yang et al. (Yang Z and Bo Y. C. 1998) described a test method for percussion primer ignition, which was verified in 12.7 and 14.5 mm caliber machine guns. Li et al. (Li W. Z et al. 2022) offered the new idea of conducting primer firing experiments in an open explosion vessel and using a high-speed mid-wave infrared thermal imaging camera to capture the entire process of primer firing. This method could be used to assess the energy output of gun primer. Lee et al. (Lee, H.S., Bichay, M., & Baglini, J.L. 2013) used a close explosion vessel to characterize the energy output of the percussion ignition device. They measured the output pressure curve and ignition delay of the device at a non-ambient temperature. Ma et al. (Ma J G and Zhang D J. 2021) designed a primer firing performance test device for repeating rifles to adapt to the recent requirements for ammunition quality test techniques. Their tests confirmed the reliability, safety, and convenience of the test device and updated the tools available for determining the primer's firing performance. Wang et al. (Wang Z. S and Shen Y. 2019) improved the firing sensitivity of

bullets by adjusting percussion composition and anvil depth. They proved the feasibility of such adjustments by comparing them against the test results. Wang et al. (2022) designed a miniature adiabatic closed explosion vessel to study the energy release features of primer under different initial temperatures based on a correction for heat loss. They performed comparative experiments for the insulation performance and primer ignition experiments under three initial temperatures (-20°C, 28°C, and 50°C) and obtained the temporal variations of pressure in the closed explosion vessel upon primer ignition under different working conditions.

The firing performance of the percussion ignition system of firearms is jointly influenced by the percussion energy received by the firing pin, dimension parameters of components, and assembly dimension. Understanding the influence of each factor and the interactions between different influencing factors is of high importance for improving the design and firing reliability of the percussion ignition system. The above-cited studies are mainly focused on test methods for firearm's percussion ignition performance. However, for various reasons, such as high processing technology and experimental costs, only influence patterns of only single factors on the percussion ignition performance have been studied. Identifying and ranking factors influencing the percussion ignition performance of a small-caliber automatic rifle can be performed by a numerical simulation via a FEM model of the firearm's percussion ignition performance. To this end, the current study assessed and designed a simulation test device that reproduced the percussion ignition of the firearm. The output pressure of the percussion ignition system was measured, and the gas pressure response upon ignition was obtained. Euler-Lagrange coupling method was employed to build the FEM model for the percussion ignition performance of the rifle. The experimental results were used to calibrate the simulation parameters and verify the accuracy of the simulation model. Isight was used for the parametric simulation of the percussion ignition performance. Single-factor analysis and design of experiment (DOE) were performed to study the influence of the following seven factors on the percussion ignition performance and the sensitivity of these factors: percussion energy (related to hammer's falling height (Zhang X. F. 1991)), firing pin protrusion, primer seating depth, locking clearance, firing pin head diameter, thickness of primer cup bottom, and anvil head diameter.

2 PERCUSSION IGNITION SIMULATION EXPERIMENTS

Once the primer is struck, the percussion composition is ignited, sending a stream of hot gases as a jet of flame and through the flash hole and into the cartridge case. Gas pressure response in the cartridge case is an important characterization of the output energy of the percussion ignition system and also the basis for assessing the ability of primer to ignite the powder (Xu J. G et al. 2010). Design of simulation test device (Zhao C. C et al. 2022) for firearm's percussion ignition performance can simulate the real percussion ignition process of firearms. Taking a small-caliber rifle's firing pin and cartridge case with primer as the test object. A pressure test system was constructed and consisted of the following components: test tool, piezoelectric pressure transducer, charge amplifier, multi-channel data logger, acceleration sensor, and data processing hardware and software, as shown in Fig. 1. The test tool is shown in Fig. 2.

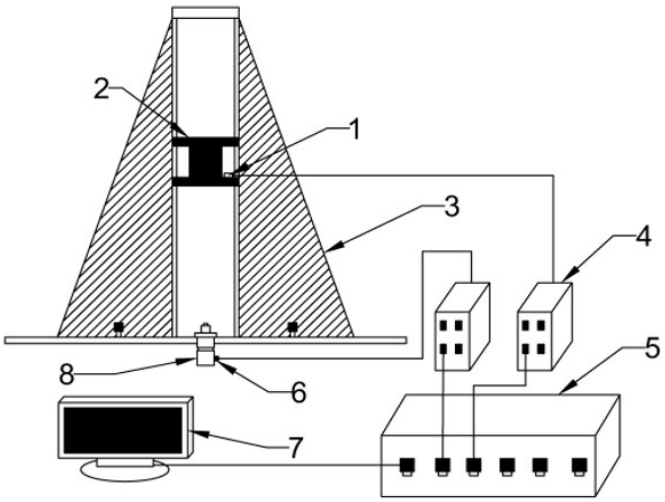

Figure 1 *Schematic diagram of the output pressure test system for the percussion ignition system.* 1-Acceleration sensor, 2-Drop weight, 3-Simulation test device for firearm's percussion ignition performance, 4-Charge amplifier, 5-Multi-channel data logger, 6-Piezoelectric pressure transducer, 7-Data processing system, 8-Output pressure test tool for the percussion ignition system

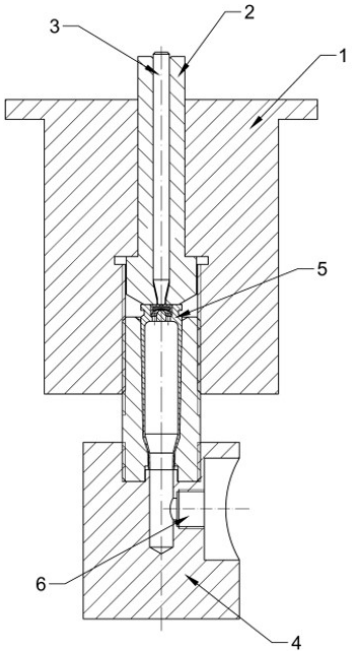

Figure 2 *Schematic diagram of the output pressure test tool for the percussion ignition system.* 1-Pressure measuring screw, 2-Firing pin sleeve, 3-Firing pin, 4- Sensor installation block; 5-Cartridge case with primer; 6-Position for installing piezoelectric force transducer

According to the general specifications for cartridge primer (WJ2644-2005, 2005) , the firing rate of small-caliber firearms should be 99-100% during the impact sensitivity test for the primer if the drop weight of 250 g falls from a height of 240 mm. Using a 250 g drop hammer, the drop hammer height is set to 240 mm, and 20 sets of output pressure tests of the firing ignition system are repeated to test the gas pressure response of the firing ignition system under the impact of the drop hammer. The XY9800A signal detection and analysis system was used to acquire the original data files of pressure response and extract characteristic parameters, namely, time to pressure initiation, peak pressure, and time to peak. Using the values of these parameters, the output performance of the percussion ignition system was evaluated. For the first shot, the gas pressure-time response curve obtained is shown in Fig. 3.

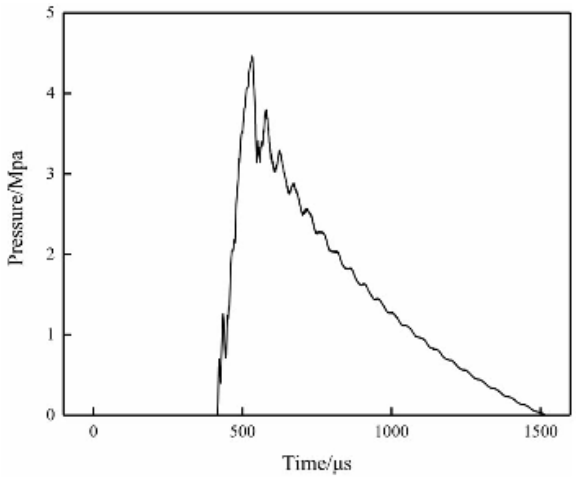

Figure 3 Output pressure-time curve of the percussion ignition system.

It can be seen from the figure that when the flame passed through the flash hole to enter the cartridge case, the pressure began to rise at about 422 μs when the flame reached the installation position of the pressure transducer. This moment was defined as the time to pressure initiation. The pressure reached the peak, about 4.46 MPa, at about 532 μs. The lag between the time to pressure initiation (422 μs) and the time to peak pressure (532 μs) was about 110 μs.

The time to pressure initiation, peak pressure, and the time to peak pressure were extracted. The average results of 20 experiments are shown in Table 1. For the small-caliber rifle, the average values of characteristic parameters of the

pressure response in the hollow chamber were estimated as follows as the drop weight of 250 g fell from a height of 240 mm, striking the primer to generate flame that entered the hollow chamber: The time to pressure initiation was 435.71 μs; the peak pressure was 4.35 MPa; the time to peak was 543.43 μs.

Table 1 Characteristic parameters of output pressure of the percussion ignition system.

Characteristic parameters	
Average initiation time of pressure(μs)	435.71
Average peak pressure(MPa)	4.35
Average time to peak(μs)	543.43

3 FEM SIMULATION OF FIREARM'S PERCUSSION IGNITION PERFORMANCE

3.1 FEM model of firearm's percussion ignition performance

LS-DYNA was used to simulate the following processes: firing pin striking the primer, percussion composition burning, and gases generated by primer ignition entering the hollow chamber via the flash hole. The variation law of flame gas pressure transmitted to the cartridge case after combustion of percussion composition under different percussion conditions was obtained.

3.1.1 Numerical simulation

Among techniques and algorithms of numerical simulation, the most common ones are the Lagrange algorithm, Euler's algorithm, and the ALE algorithm.

The percussion ignition process of firearms is a gas-solid coupling process. Therefore, the Lagrange algorithm was applied to metal parts, including drop weight, firing pin, bolt, casing, and primer cup. The percussion composition generating gases during the reaction was analyzed using the ALE algorithm, which can adaptively cope with the discontinuity of fluid and structural meshes. In the ALE algorithm, meshes in the fluid domain can deform as the fluid moves, while those in the solid domain remain immobile. Because of this advantage, the ALE algorithm can more effectively simulate solid-fluid interactions.

3.1.2 Mesh model

To improve the computational efficiency, a 1/4 FEM model for the percussion ignition system was established, the FEM model is consisted of drop weight, firing pin, bolt, casing, primer cup, percussion composition, pan cover, and air domain. The dimension parameters of each component were consistent with those in the experiments, as shown in Figs. 4 and 5.

In order to verify the mesh sensitivity of the simulation results, four different mesh numbers were selected for verification, and the mesh numbers were 186598, 147796, 123586, and 95624, respectively. During the simulation, the time to pressure initiation of the monitoring points was monitored, and the results of the mesh sensitivity analysis are shown in Table 2. The results show that when the mesh numbers are 147796, the time to pressure initiation has converged, and the calculation time for the mesh numbers are less, and the computing resources occupied are less. Therefore, based on the results of the mesh sensitivity analysis, the mesh numbers were selected as 147796.

Table 2 Results of mesh sensitivity analysis.

Number of meshes	Time to pressure initiation/μs
186598	568.75
147796	435.71
123586	452.96
95624	523.56

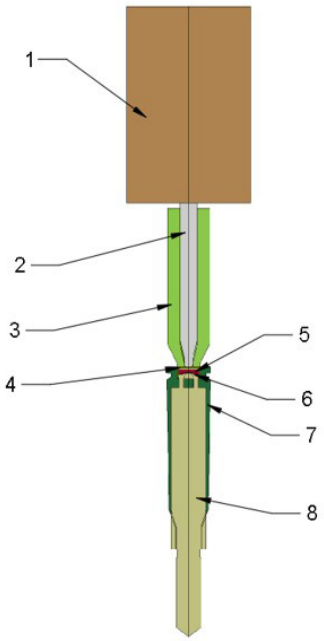

Figure 4 *Simplified FE model of the percussion ignition system.* 1-Drop weight, 2-Firing pin, 3-Bolt, 4-Primer cup, 5- Percussion composition, 6-Pan cover, 7-Casing, 8-Pressure measuring tool (air domain)

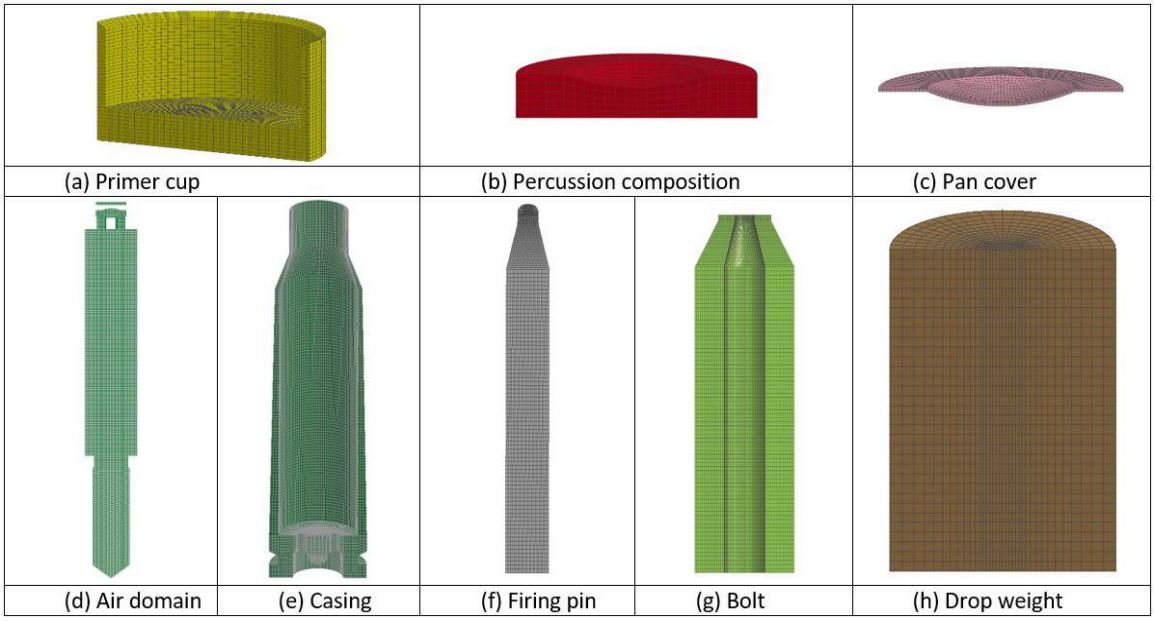

Figure 5 FEM model of each component.

3.1.3 Material models and parameters

The primer cup, firing pin, and bolt were simulated using the Johnson-Cook constitutive model. Parameters of the Johnson-Cook models of the firing pin and the bolt are listed in Table 3 (Zhu, Y. 2019), and those of the primer cup were determined by referring to Wei (Zhifang Wei,et al. 2023). The percussion composition was simulated using the Lee-Tarver model (the ignition and growth model). The basic parameters of the percussion composition and those of the ignition and growth model were determined as in Wei (Zhifang Wei,et al. 2023).

Casing and drop weight were simulated using the *MAT_RIGID, with the parameters shown in Table 4. Air was modeled with the *MAT_NULL material model.

The pan cover was defined using the PLASTIC_KINEMATIC model, a hybrid model of isotropic hardening and kinematic hardening. By adjusting the hardening parameter β angle to select the matching degree between isotropic and kinematic hardening. Strain failure criteria were adopted to judge the occurrence of failure (Shen, L. J. 2001). The material parameters are listed in Table 5 (LI, Z. 2022).

Table 3 Parameters of the Johnson-Cook model of the firing pin and bolt.

Parameter	Firing pin	Bolt
Density(g/cm3)	7.87	7.85
Elastic modulus(GPa)	206.9	220
Poisson's ratio	0.30	0.28
Yield strength(MPa)	1440	1440
Strain hardening modulus(MPa)	1500	1510
Strain hardening rate	0.443	0.443
Strain rate coefficient	0.039	0.039

Table 4 Model parameters of the casing and drop weight.

Parameter	Case	Drop weight
Density(g/cm3)	7.85	7.85
Elastic modulus(GPa)	209.99	209.99
Poisson's ratio	0.3	0.3

Table 5 Material parameters of the pan cover.

Parameter	Pan cover
Density(g/cm3)	1.20
Elastic modulus(GPa)	60
Poisson's ratio	0.33
Yield stress(MPa)	50
tangent modulus(GPa)	0.2
Hardening parameter	0.5

Air was treated as an ideal gas and described jointly with the null material model (*MAT_NULL) and linear polynomial equation of state (*EOS_LINEAR_POLYNOMIAL). The latter has the following form:

$$p = c_0 + c_1\mu + c_2\mu^2 + c_3\mu^3 + (c_4 + c_5\mu + c_6\mu^2)E \tag{1}$$

where c0, c1, c2, c3, c4, c5, and c6 are constants.

$$\mu = \frac{\rho}{\rho_0} - 1 \tag{2}$$

$\frac{\rho}{\rho_0}$was the ratio of current density to reference density. ρ was a nominal or reference density defined in the *MAT_NULL (LS-DYNA, 2020).

3.1.4 Boundary and Contact Definitions

The boundary conditions were defined as follows:

1] The drop weight exerted an initial velocity load;

2] The vector components of the normals of the two symmetry planes of VX and VY were defined respectively, that was, the two symmetry planes of XOZ and YOZ were defined.

3] Displacement constraints in the X, Y, and Z directions and rotational constraints in the RX, RY, RZ directions were applied to the shell.

The contact algorithm was set as follows:

1] Defined as face-to-face automatic contact between bolt and primer shell (*CONTACT_AUTOMATIC_SURFACE_TO_SURFACE).

2] The relationship between the primer shell and the firing pin was defined as an erosion contact (*CONTACT_ERODING_SURFACE_TO_SURFACE). The static friction coefficient was set to 0.3 and the dynamic friction coefficient was set to 0.3.

3.2 Analysis of results from FEM simulation of firearm's percussion ignition performance

The FEM model was run, and the drop weight (250 g) was released from a height of 240 mm to strike the firing pin at a speed of 2.17 m/s. The flame transfer response triggered by primer ignition was studied by numerical simulation, lasting 1000 μs.

As shown by the simulation results, the firing pin reached a maximum speed of 4.19 m/s at 59.99 μs, which was then attenuated to 0 m/s at 860 μs. Moreover, the firing pin moved in a direction opposite to the fall due to the action of high-temperature gases, as shown in Fig. 6. As the firing pin punched the primer, the depth of the pit made in the primer cup reached the maximum of 0.592 mm at 920 μs. The variation curve of the pit's depth made in the primer cup over time was obtained, as shown in Fig. 7. The percussion ignition response over time is illustrated in Fig. 8.

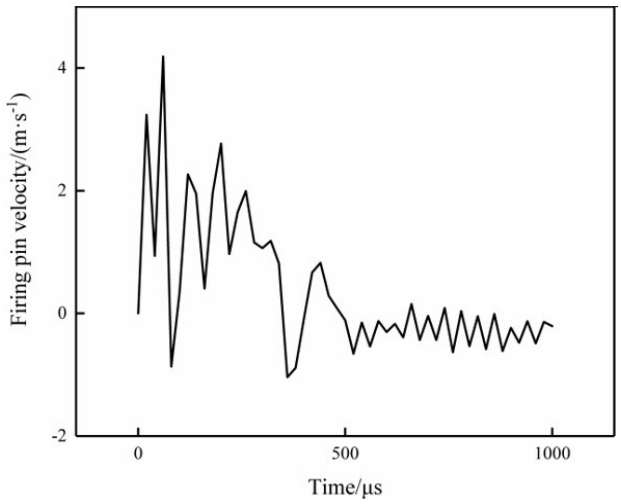

Figure 6 Firing pin velocity-time curve.

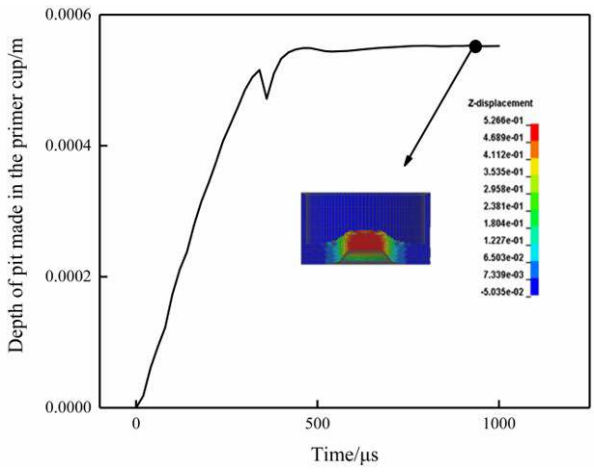

Figure 7 Variation curve of the depth of pit made in the primer cup.

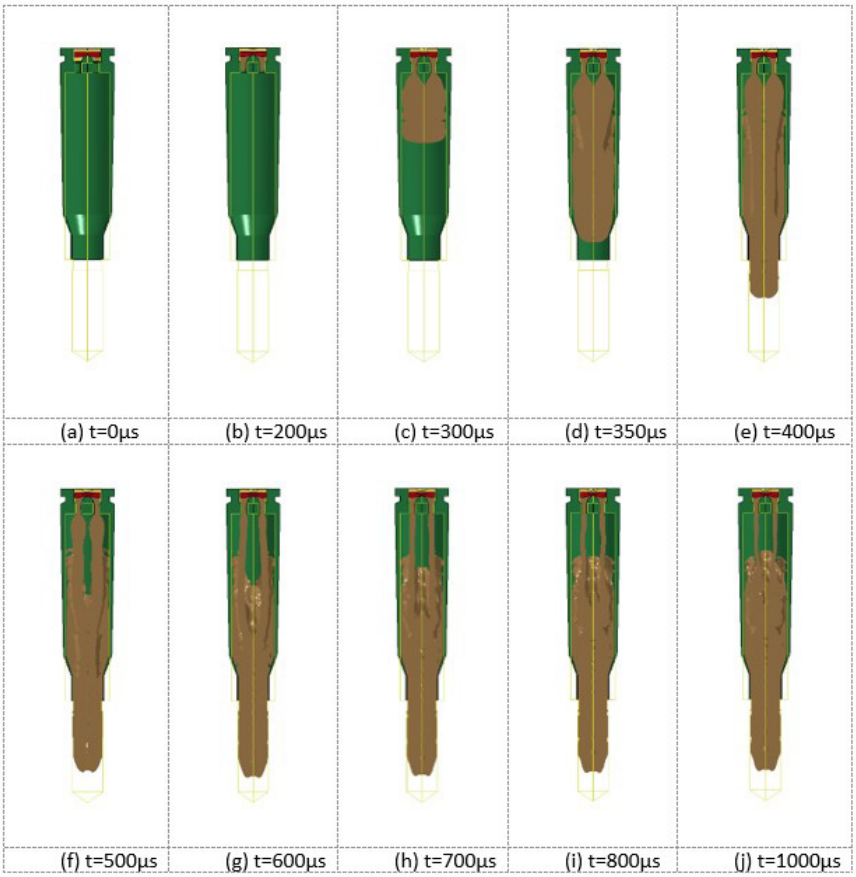

Figure 8 Response process of percussion ignition.

Meshes corresponding to the installation position of the pressure transducer were chosen to output the pressure-time curves. The results showed that the flame reached the installation position of the pressure transducer at about 440 μs. As a result, the pressure rose, reaching the peak of about 4.18 MPa at about 520 μs. The lag between the time to pressure initiation and the time to peak pressure was about 80 μs. A comparison against the experimental results is shown in Table 6, and the error is below 5%.

Table 6 Comparison of results from experimental and simulation.

	Time to pressure initiation(μs)	Peak pressure(MPa)	Time to peak(μs)
Average test result	435.71	4.35	543.43
Simulation result	445	4.18	517
Error	2.13%	4.86%	3.96%

3.3 Parametric simulation of the percussion ignition performance

Various factors, including percussion energy, structural parameters, and assembly relations, influence percussion ignition performance. Parametric simulation of the percussion ignition performance is an automatic process that can improve computational efficiency.

Here, percussion ignition performance was analyzed by joint simulation using TrueGrid, LS-DYNA, and LS-PREPOST. The parametric simulation was programmed using Isight, as shown in Fig. 9. First, the Simcode component was run to encapsulate the input and output files of the simulation into ASCII files. By analyzing the input file ".tg" file of TrueGrid (geometry and mesh model) and the input file ".k" file of LS-DYNA (simulation model and parameter), the parameterized definition of relevant parameters was accomplished. Next, batch files "Run_TrueGrid.bat", "Run_ls-dyna.bat", and "Run_ls-prepost.bat" were executed. TrueGrid was invoked to mesh the model, LS-DYNA to perform numerical simulation, and LS-PREPOST to post-process the simulation results. Finally, the results of the gas pressure response analysis were saved in the output file "pressure.txt". In this way, a parametric simulation of the percussion ignition performance was finished.

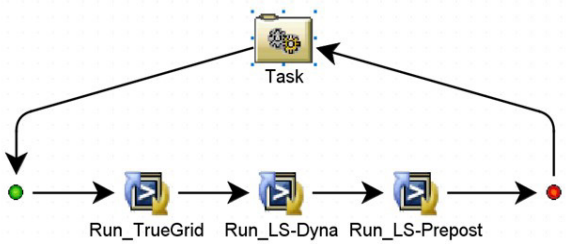

Figure 9 Workflow of parametric simulation of the percussion ignition performance.

By the method of fault tree analysis, the main influencing factors of the percussion ignition performance of firearms are determined, which were parameters of parametric simulation, as shown in Table 7. The schematic diagrams of the primer seating depth, firing pin protrusion, anvil head diameter, locking clearance, thickness of primer cup bottom, and anvil head diameter are presented in Figs. 10-12.

Table 7 Parameters of parametric simulation of the percussion ignition performance.

Parameter	Symbol	Unit
Primer seating depth	psd	mm
Firing pin protrusion	fpp	mm
Locking clearance	lc	mm
Hammer's falling height	hfh	mm
Firing pin head diameter	fphd	mm
Thickness of primer cup bottom	tpcb	mm
Anvil head diameter	ahd	mm

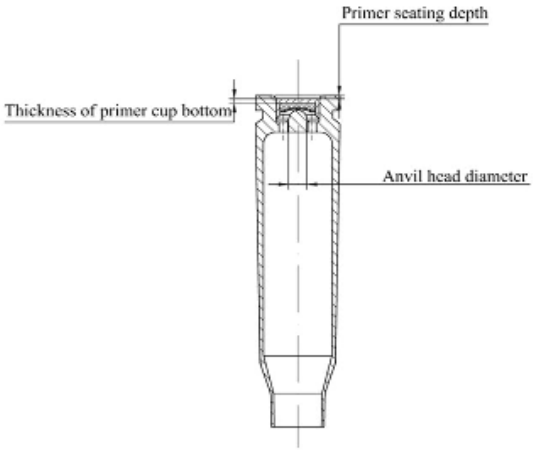

Figure 10 Schematic diagram of the primer seating depth, thickness of primer cup bottom, and anvil head diameter.

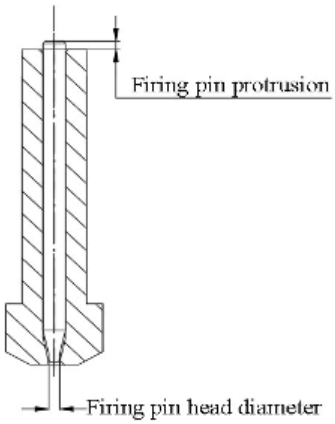

Figure 11 Schematic diagram of firing pin protrusion and firing pin head diameter.

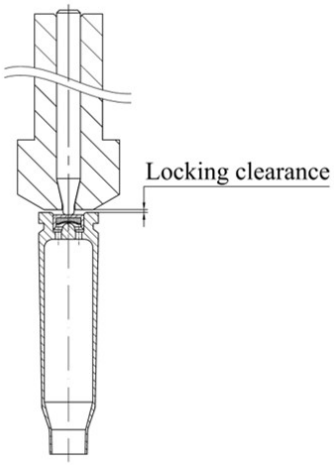

Figure 12 Schematic diagram of locking clearance.

4 SENSITIVITY ANALYSIS OF THE INFLUENCING FACTORS OF FIREARM'S PERCUSSION IGNITION PERFORMANCE

4.1 Local sensitivity analysis of influencing factors of the firearm's percussion ignition performance

Sensitivity analysis (Han, L. S., Li, X. Y., Yan, D. K. 2008) is a method to study and analyze the sensitivity of state or output changes of a system (or model) to changes in system parameters or surrounding conditions. Sensitivity analysis is divided into local and global sensitivity analysis. Local sensitivity analysis analyzes the effect of one parameter by adopting the control variable method while taking averages of other parameters. The degree of changes in model results caused by changes in the parameter of concern is determined.

The evaluation parameter u for percussion ignition performance was defined as the pressure response in the casing as the flame generated by the drop weight striking the primer entered the casing via the flash hole. The time to pressure initiation is characterized by tpi. The influencing factors of the firearm's percussion ignition performance included the following: primer seating depth, firing pin protrusion, locking clearance, hammer's falling height, firing pin head diameter, thickness of primer cup bottom, and anvil head diameter. Local sensitivity analysis for each influencing factor of the percussion ignition performance was conducted using equation (3). A partial derivative of the evaluation parameter u is taken concerning each influencing factor x_i.

$$Sen(\frac{u}{x_i}) = \frac{\partial u}{\partial x_i} \tag{3}$$

where the time to pressure initiation (tpi) is determined by all of the seven factors:

$$u = tpi = f(x_1, x_2, x_3, x_4, x_5, x_6, x_7) \tag{4}$$

where x_1 is the primer seating depth (psd); x_2 is the firing pin protrusion (fpp); x_3 is the locking clearance (lc); x_4 is the hammer's falling height (hfh); x_5 is the firing pin head diameter (fphd); x_6 is the thickness of primer cup bottom (tpcb); x_7 is the anvil head diameter (ahd).

Given the above, the local sensitivity of a single factor influencing the time to pressure initiation is conducted using the formula below:

$$Sen(\frac{u}{x_i}) = \frac{\partial u}{\partial x_i} = \frac{f(x_1,\ldots,\ x_i+\Delta x_i,\ldots,\ x_7)-f(x_1,\ldots,\ x_i,\ldots,\ x_7)}{\Delta x_i},\quad i = 1,2\cdots,7 \tag{5}$$

Parametric simulation of the percussion ignition performance was performed using the control variable method for each influencing factor under varying working conditions. The influence pattern of each factor on time to pressure ignition (tpi) is shown in Fig. 13.

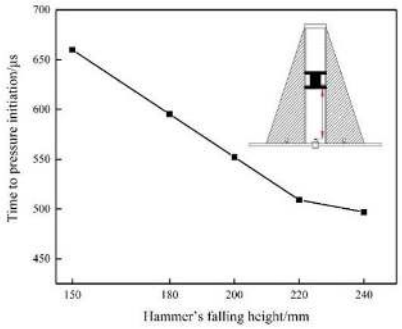

(a) Relationship between hammer's falling height and time to pressure initiation

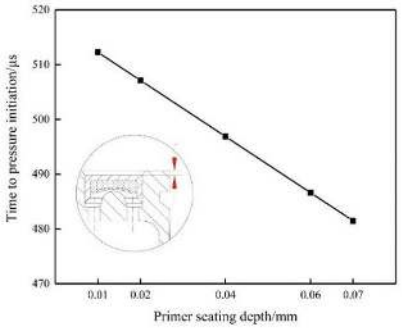

(b) Relationship between primer seating depth and time to pressure initiation

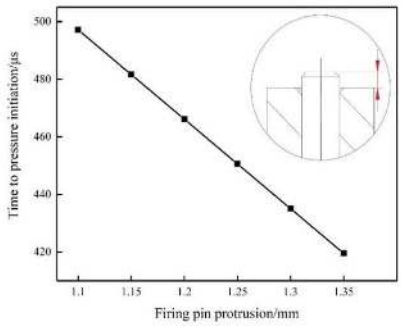

(c) Relationship between firing pin protrusion and time to pressure initiation

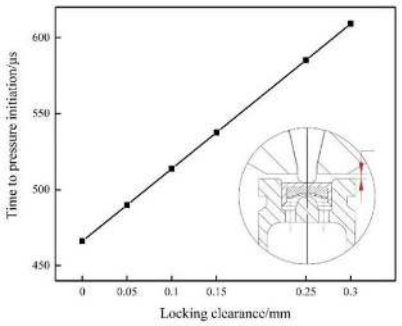

(d) Relationship between locking clearance and time to pressure initiation

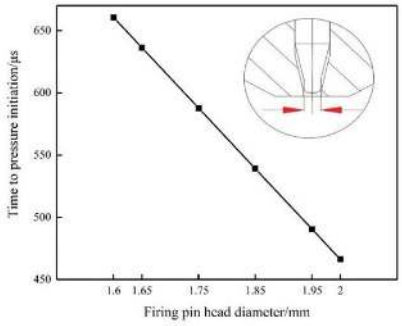

(e) Relationship between firing pin head diameter and time to pressure initiation

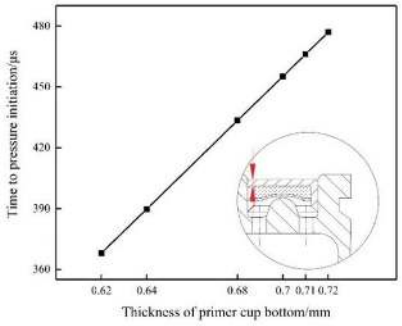

(f) Relationship between thickness of primer cup bottom and time to pressure initiation

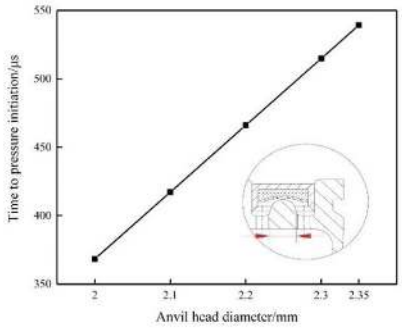

(g) Relationship between anvil head diameter and time to pressure initiation

Figure 13 Influence of a single factor on the percussion ignition performance (time to pressure initiation).

The results showed that as the hammer's falling height increased, the firing pin stroke the primer with a greater impact, and the percussion composition was more easily ignited, thus reducing the time to pressure ignition. As the firing pin protrusion increased, the firing pin would have a greater displacement stroke after being punched. Therefore, the primer cup was more severely deformed, which was conducive to primer ignition and reduced the time to pressure initiation. As the locking clearance increased, the firing pin would have a smaller displacement stroke after being punched. The primer cup was less severely deformed, which was not conducive to primer ignition and prolonged the time to pressure initiation. As the primer seating depth increased, the distance from the anvil to the percussion composition decreased, thus aggravating the squeezing and friction generated by the anvil tip penetrating the percussion composition. Therefore, the percussion composition was more likely to be ignited, and the time to pressure initiation was shortened. As the firing pin head diameter increased, the primer cup deformation caused by the firing pin striking the primer was aggravated. The squeezing and friction caused the percussion composition to be more severe, which was conducive to primer ignition and shortened the time to pressure initiation. As the thickness of the primer cup bottom increased, greater energy was needed to cause the primer cup to deform, resulting in a greater energy loss. Therefore, less energy would be left to ignite the primer, which further prolonged the time to pressure initiation. As the anvil head diameter increased, the squeezing and friction caused by the percussion composition would decrease. The growth rate of the hot spot in the percussion composition also decreased, which was not conducive to primer ignition, thus prolonging the time to pressure initiation.

Curves were fitted to analyze the relationship between each influencing factor and the time to pressure initiation. The slopes of the fitted curves were extracted and plotted on the graph. Thus, the comparison of the sensitivity of different influencing factors as shown in Fig. 14.

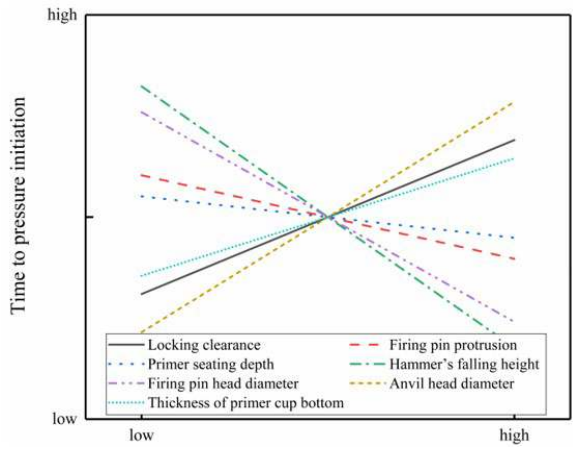

Figure 14 Comparison of the sensitivity of different influencing factors for percussion ignition performance (time to pressure initiation).

It can be seen in Figs. 13 and 14 that locking clearance, thickness of primer cup bottom, and anvil head diameter had a positive impact on the time to pressure initiation. That is, when these three influencing factors increased, the time to pressure initiation was prolonged. The hammer's falling height, primer seating depth, firing pin protrusion, and firing pin head diameter harmed the percussion ignition performance. That is, when these four factors increased, the time to pressure initiation decreased. The influencing factors were ranked as follows in descending order of sensitivity: hammer's falling height > anvil head diameter > firing pin head diameter > locking clearance > thickness of primer cup bottom > firing pin protrusion > primer seating depth.

4.2 Global sensitivity analysis of influencing factors of firearm's percussion ignition performance based on design of experiment (DOE)

4.2.1 Design of experiment (DOE)

Design of experiment (DOE) is an important mathematical statistics method and can be used to identify key factors from several candidates and determine the influence degree of each. The most commonly used DOEs include orthogonal design, Latin hypercube design, and optimal Latin hypercube design.

Among them, Latin hypercube design, first proposed by McKay (McKay, M. D. 1992), is to extract m points from an n-dimensional space. Hence, the range of each variable is evenly divided into m intervals. Sampling is done once for each

interval, thus constructing a Latin hypercube with a sample size m. This method requires fewer tests and has a better ability to construct a sample space and fit non-linear responses.

In the Latin hypercube experimental design method, there are some related formulas that can be used to calculate the position and number of sample points.

The subinterval width on each dimension can be calculated by the following formula :

$$\omega_i = \frac{1}{N} \tag{6}$$

where, denotes the width of the subinterval on the ith dimension of ωi, and N denotes the number of sample points.

The value of the ' j ' sample point on the ' i ' dimension can be calculated by the following formula:

$$x_{ij} = \omega_i\left(j + \alpha_{ij} - 1\right) \tag{7}$$

Where denotes the value of the ' j ' sample point on the ' i ' dimension of xij.

"α_{ij} "denotes the random integer number of the ' j ' sample point on the ' i ' dimension. The value range is [1, N].

The number of sample points determines the dimension of the parameter space, which can be calculated by the following formula :

$$N = k^d \tag{8}$$

Among them, N represents the number of sample points, k represents the number of sub-intervals on each dimension, and d represents the dimension of the parameter space.

Optimal Latin hypercube design, as an optimization of the Latin hypercube design, allows for a more uniform distribution of sample points in the sample space and hence has a higher efficiency in constructing a sample space.

Taking the nine levels of factor 2 as an example, the sample points were generated using the four methods, namely, full factorial design, orthogonal design, Latin hypercube design, and optimal Latin hypercube design, as shown in Fig. 15.

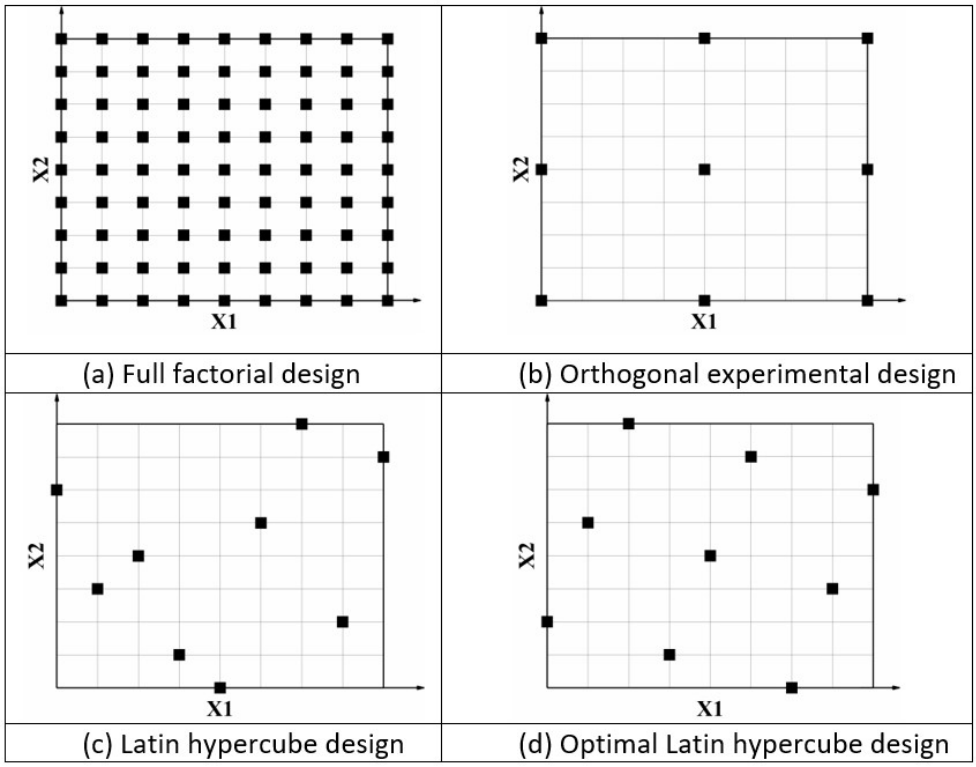

Figure 15 Schematic diagram of sample points selected for DOE.

4.2.2 Global sensitivity analysis

Global sensitivity analysis has the following advantages: It allows one to assess the global influence of each factor on the model (not only at a specific position, but more importantly, at different positions); the range of the factor can be extended to the entire domain of definition, and different factors can be varied simultaneously. Therefore, global sensitivity analysis is suitable for studying non-linear, non-superimposed, and non-monotonic models.

The optimal Latin hypercube experimental design method was used to carry out the global sensitivity analysis of the influence of seven factors on percussion ignition performance, namely, firing pin protrusion, locking clearance, primer seating depth, hammer's falling height, firing pin head diameter, thickness of primer cup bottom, and anvil head diameter. The analysis consisted of the following steps: Using Isight, sample spaces for combinations of influencing factors were generated with optimal Latin hypercube design in the DOE component. The range of each factor was the tolerance range, with the number of sample points set to 200. Next, Simcode was run to invoke the parametric simulation workflow of percussion ignition performance and do massive calculations. Sample point matrices were generated for DOE for each factor, as shown in Table 8.

Table 8 Sample point matrices for DOE for global sensitivity analysis of influencing factors of firearm's.

Sample point matrices								
Serial No.	**lc(mm)**	**tpcb(mm)**	**ahd(mm)**	**fphd(mm)**	**hfh(mm)**	**fpp(mm)**	**psd (mm)**	**tpi(μs)**
1	0	0.68588	2.1734	1.93065	168.84	1.19508	0.14628	591.666
2	0.3289	0.69518	2.2548	1.9191	217.49	1.18201	0.09884	727.445
3	0.102	0.70472	2.2377	1.91106	172.46	1.16372	0.14226	705.711
4	0.109	0.70296	2.2668	1.92714	226.33	1.16894	0.10487	615.024
5	0.2691	0.69417	2.1583	1.97286	232.76	1.17156	0.16477	561.113
6	0.1249	0.6904	2.2387	1.9608	161.61	1.19573	0.16879	677.137
7	0.0299	0.6698	2.2276	1.9995	223.12	1.22643	0.12216	467.068
8	0.0827	0.66905	2.1513	1.98191	169.25	1.18789	0.15955	571.541
9	0.1899	0.67608	2.1	1.94824	213.07	1.20945	0.16317	518.661
10	0.299	0.66829	2.1211	1.94322	176.08	1.23231	0.09965	680.066
⋮	⋮	⋮	⋮	⋮	⋮	⋮	⋮	⋮
196	0.1548	0.70749	2.1442	1.94975	175.28	1.26563	0.11492	645.725
197	0.1073	0.6693	2.1784	1.99899	191.76	1.17548	0.10568	571.447
198	0.1477	0.66352	2.2347	1.97638	234.37	1.16307	0.12095	527.116
199	0.1688	0.68563	2.1975	1.90402	181.71	1.21075	0.16839	652.608
200	0.1143	0.70422	2.1141	1.91759	184.52	1.17025	0.12779	626.916

Note: tpcb is the thickness of the primer cup bottom; fpp is the firing pin protrusion; hfh is the hammer's falling height; ahd is the anvil head diameter; fphd is the firing pin head diameter; lc is the locking clearance; psd is the primer seating depth; tpi is the time to pressure initiation.

Sensitivity analysis was conducted using the Pareto chart, as shown in Fig. 16.

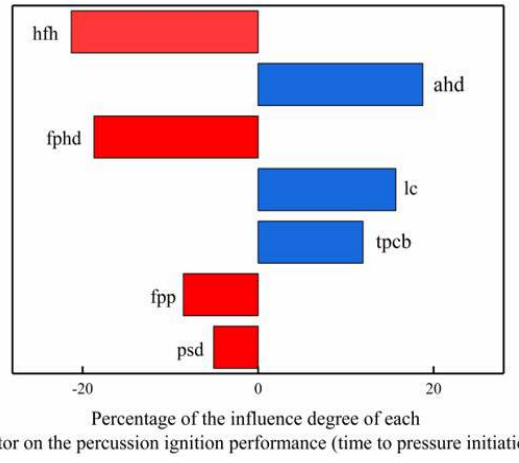

Figure 16 Pareto chart showing the influence degree of each factor on the percussion ignition performance (time to pressure initiation).

The Pareto chart illustrates the degree of each factor's influence on the percussion ignition performance. In Fig.16, the blue bars represent positive influence, and the red bars represent negative influence. The length of the bars is directly proportional to the degree of influence. It can be deduced from the Pareto chart in Fig. 16 that the hammer's falling height (hfh), firing pin protrusion (fpp), primer seating depth (psd), and firing pin head diameter (fphd) had a negative impact on time to pressure initiation (tpi). Of these, the influence degree of the hammer's falling height was the largest, followed by the firing pin head diameter, firing pin protrusion, and primer seating depth successively. Locking clearance, anvil head diameter, and primer head thickness had a positive impact on the time to pressure initiation. The influence degree of anvil head diameter was the largest, followed by locking clearance and thickness of primer cup bottom.

5 CONCLUSIONS

This study performed percussion ignition simulation experiments, numerical simulation, parametric simulation, and sensitivity analysis of influencing factors of the firearm's percussion ignition performance based on design of experiment (DOE). Based on the results obtained, the following conclusions were drawn:

(1) Percussion ignition simulation experiments were performed using a drop weight of 250 g with a hammer's falling height of 240 mm. For small-caliber rifles, the time to pressure initiation was 435.71 μs, peak pressure 4.35 MPa, and time to peak 543.43 μs. Under the same working condition, the time to pressure initiation was 435.71μs, the peak pressure was 4.18 MPa, and the time to peak was 517.00 μs, according to the FEM simulation. The maximum error between the experimental results and the FEM simulation was below 5%, thus verifying the accuracy of the numerical model.

(2) The influence of the four influencing factors, namely the hammer's falling height, the primer seating depth, the firing pin protrusion, and the firing pin head diameter, on the time to pressure initiation was negative.

(3) The influence of the three influencing factors of locking clearance, thickness of primer cup bottom and anvil head diameter on the time to pressure initiation showed a positive effect.

(4) The influence of seven influencing factors on the percussion ignition performance of firearms is as follows: hammer's falling height > anvil head diameter > firing pin head diameter > locking clearance > thickness of primer cup bottom > firing pin protrusion > primer seating depth.

Author's Contributions: Conceptualization, Zhifang Wei; methodology, Zhifang Wei and Yongbo Yu and Xiucheng Hou; investigation, Changfan Xin and Yirui Li ; writing—original draft preparation, Yongbo Yu ; writing—review and editing, Zhifang Wei ; visualization, Yongbo Yu; supervision, Zhifang Wei ; project administration, Zhifang Wei .

Editor: Marcílio Alves

References

Cai, R. J. (1999). Design principle of initiating explosive device. Beijing: Beijing Institute of Technology Press, 10.

Wang, Y. J. (2014). Modern design theory and method of infantry automatic weapons. National Defense Industry Press.

Xu, J. G., Jin, C. G., Chen, L.&Cui, Y.H. (2010). Design of primer output energy tester. Initiators & Pyrotechnics (03), 54-56.

Zhu, Y. L. (2014) Energy release characteristics of primer and its influence on interior ballistic performance. Ph.D. Thesis. Nanjing University of Science and Technology.

Wang, L. F., Wa X. R., Yi, F., Xiao, S. M. (2001) Design and test of small-bottom-fire test device. Chinese Journal of Explosives & Propellants, (04),52-53 + 57.

Evans N. A., Brezowski C. F. (1990) The effect of charge mixture ratio and particle size on igniter plume heat transfer characteristics. Explosive Subsystems Division 2512 Sandia National Laboratories Albuquerque.

Yong L. V. (1985) An evaluation of temperature and heat flux of gasless and glassy percussion primers. Defense Science and Technology Organization Materials Research Lab.

Liu, W. Q., Cai, R. J., Wen, Y. Q., Liu, L. B., Su, Z. Z. (2007). Primer output pressure - temperature test system. Journal of Test and Measurement Technology, (05), 377-381.

Wang, H., Liang, S. C., Zhang, Y., Shao, Z. J. (1999). Study of flame propagation characteristics in a fire transfering tube. Explosion and Shock Waves, (01): 67-72.

Huang, H. K., Cai, R. J., Liu, W. Q., Wen, Y. Q. (2004). Methods for measuring the output energy of primer. Initiators & Pyrotechnics, (03): 47-49+4.

Zhao, C. C., Wei, Z. F., Guo, X. X., Xin, C. F., Zhang, S. X., Pu, H. (2022). Design of a gun firing ignition system simulation test device. Ordnance Industry Automation, 41 (04): 10-13 + 18.

Frank J. V. (2002). Comparison of Several Techniques to Evaluate Percussion Primer Performance. 29th International Pyrotechnics Seminar, Westminster, Colorado.

Stefan Lundgaard, Soon Hock Ng,Damien Cahill, Johan Dahlberg, Dong Ruan, Nerida Cole, Paul R Stoddart, Saulius Juodkazis. (2019). Towards Safer Primers: A Review. Technologies(4),75.

Li, L. C., Ye, Z. Q. (1997). Development of 35 System Impact Primer. In tiators & Pyrotechnics, (03): 1-6.

Ge, T., Jia, Z. H., Zhou, K. D. Analysis of firing process of an automatic rifle firing mechanism. Journal of Ballistics, 2008 (02): 77-80.

Yang, Z., Bo, Y. C. (1998). Study on test of ignition time of mechanical primer. Journal of Test and Measurement Technology, 12 (2): 454-458.

Li, W. Z., Wang, G., Wei, Z. F., Zhao, C. C., Zhang, J. H., Nie, P. (2022). Transient flame temperature test and image of bullet primer. Chinese Journal of Energetic Materials. (12),1266-1271.

Lee, H.S., Bichay, M., & Baglini, J.L. (2013). Characterization of PVU-2/A Percussion Primer Output Energy.

Ma, J. G., Zhang, D. J. (2021). Design of test apparatus for ignition performance of multi-continuous fire. Initiators & Pyrotechnics, (06): 58-61.

Wang, Z. S., Shen, Y. (2019). Research on improving the firing sensitivity of bullets. Defence Industry Conversion in China, (11): 57-60.

Wang, L. X., Dai, Y., Wang, J. G., Zhang, X. W. (2022). Experimental study on the effect of initial temperature on energy release characteristics. Journal of Ballistics, 34 (02): 106-110.

Zhang, X. F. (1991). Raw material performance manual of foreign explosives. Ordnance Industry Press.

WJ2644-2005 (2005). General specifications for cartridge primer [S].

Zhu, Y. (2019). Study on dynamic constitutive relationship of Q355B steel based on Johnson-Cook model. Ph. D. Thesis. Harbin University of Science and Technology.

Zhifang Wei,Changfan Xin,Xiucheng Hou,Yanfei Su Fangzhou Wang.(2023).Mechanical–thermal–chemical coupled modeling techniques and numerical simulation methods for the firearm igniting process.Propellants, Explosives, Pyrotechnics(6).

Shen, L. J. (2001). Constitutive relations of isotropic and kinematic hardening materials under finite elastoplastic deformation. Journal of Ningbo University (Natural Science & Engineering), (04): 7-19.

LI, Z. (2022). Reliability analysis and research of firearm firing-ignition system. Ph. D. Thesis. North University of China, https://link.cnki.net/doi/10.27470/d.cnki.ghbgc.2022.000801doi:10.27470/d.cnki.ghbgc.2022.000801.

LS-DYNA. Keywords User's Manual. (2020). Livermore, California 94551: Livermore Software Technology Corporation.

Han, L. S., Li, X. Y., Yan, D. K. (2008). A brief analysis of several mathematical methods for sensitivity analysis. China Water Transport (Second Half Month), (04): 177-178.

McKay, M. D. (1992). Latin hypercube sampling as a tool in uncertainty analysis of computer models, Winter Simulation.