Latin American Journal of Solids and Structures
www.lajss.org

Study of Structural Capacity and Serviceability affecting the obstruction of Residential Door

Abstract

The last Chilean earthquake, occurred on February 27, 2010, allowed establishing important patterns of structural failures in reinforced concrete residential buildings; however, limited progress has been made in the study of basic standards of serviceability, such as obstruction of doors. Thus, this study focused on measuring the influence of design specifications and construction criteria of lintels and columns, in terms of obstruction of doors, considering capacity thresholds for certain levels of displacement.

The study consisted of the design and construction of a full-scale prototype of a reinforced concrete frame, designed in accordance with all the ACI-318-08 requirements, taking into account typical aspects of geometry and materiality widely used by the real estate industry, for location and size of doors. In order to quantify the structural capacity of the prototype and to study the serviceability of the door, a quasi-static cyclic test was conducted, according to load and displacement protocols specified in FEMA 356 and FEMA 461, which was adjusted by using virtual models based on a static nonlinear analysis called "Pushover".

This research verified that, for displacement levels even five times higher than those established by codes considered, the cracking degree was minimal and fully recoverable. It was also found the door evidenced malfunction when the displacements were greater than those specified by design only, validating a high degree of accomplishment of current codes, in terms of capacity and serviceability, when dealing with obstruction of residential doors.

Keywords

Obstruction of residential doors, capacity, serviceability, earthquake, pushover.

Eric Forcael[*, a]
Vicente González[b]
Francisco Orozco[c]
Alexander Opazo[d]
Cristian Belmar[d]
Joseph Vera[e]

[a]Assistant Professor, Dept. Ing. Civil y Ambiental, Univ. del Bío-Bío, Concepción, Chile
[b]Lecturer, Dept. of Civil & Environmental Eng., Univ. of Auckland, New Zealand.
[c]Faculty, Escuela de Ingeniería, Univ. Panamericana, Guadalajara, México.
[d]Assistant Professor, Dept. Ing. Civil y Ambiental, Univ. del Bío-Bío, Concepción, Chile.
[e]Research Assistant, Dept. Ing. Civil y Ambiental, Univ. del Bío-Bío, Concepción, Chile.

Received in 31 Mar 2013
In revised form 05 Jul 2013

[*]Author email: eforcael@ubiobio.cl

Nomenclature

ACI	American Concrete Institute
CITEC	Centro de Investigación en Tecnologías de la Construcción, Universidad del Bío-Bío, Chile
FEMA	Federal Emergency Management Agency
I.O.	Immediate Occupancy
L.S.	Life Safety
C.P	Collapse Prevention
DICTUC	Dirección de Investigaciones Científicas y Tecnológicas de la Pontificia Univ. Católica de Chile.
IDIEM	Instituto de Investigaciones y Ensayes de Materiales de la Universidad de Chile.
C	Walls without confinement
NC	Walls with confinement
ρ	Ratio of area nonprestrenssed longitudinal tension reinforcement to gross area of concrete section
ρ´	Ratio of area of compression reinforcement, to gross area of concrete section
ρ_{bal}	Ratio of area nonprestrenssed longitudinal tensión reinforcement, producing balanced strain conditions
f´c	Specified compressive strength of concrete)
H	Story height
h	Door height
w	Door width
Δ	Relative story displacement of a building (drift)
δ	Lateral deformation of door
a	Clearance or spacing between the door frame and the door
Ag	Gross area of concrete section
V	Shear force at section
P	Axial force

1 INTRODUCTION

1.1 Context

In recent times, the seismic activity recorded in Chile has attracted scientific interest within a number of areas of engineering sciences (Aguiar et al., 2010), particularly in identifying the causes that have triggered diverse damages in residential buildings, as well as the development of structural evaluation systems (Rojas et al., 2010). This interest has grown much more after the last earthquake on February 27 in the central-southern Chile, whose magnitude reached 8.8 on the Richter scale (Lay et al., 2010).

On this severe earthquake, multidisciplinary studies have been developed in order to collect certain profiles of failures manifested in the structures located in the most devastated areas (Guendelman, 2010). Accordingly, based on results obtained from on-site studies, it has been attempted to address the main causes that eventually involved the collapse of one or more structural elements, according to the visual characteristics perceived by practitioners.

On the other hand, the seismic demand of the XXI century has been characterized by strong earthquakes in regions densely populated which either have exceeded the average of the structural design spectra of each area, or have jeopardized the serviceability and functionality of the structures.

1.2 Research Problem

The information disseminated by several technical reports in Chile and in countries with similar seismic behavior, has allowed identifying a clear convergence of certain failure patterns that are cited frequently in studies of reinforced concrete buildings (IDIEM, 2010; Guendelman, 2010; DICTUC, 2010; Feriche, 1994). One of those patters refers to cracked lintels over doors, ranging from minor surface cracks up to full exposure of the reinforcing steel. Although the collapse of this element does not compromise the stability of the building, this phenomenon provokes the obstruction of escape routes for residents (i.e., doors), which obviously triggers a problem of higher order.

In this regard, Del Rio Bueno (2008) states that "...The design of any structure must provide to itself, a strength ensuring an adequate safety range over the expected useful life, even admitting certain "acceptable" losses of strength during that time. Such strength must be developed under serviceability conditions, that do not affect the proper functionality and appearance of the work built". According to this philosophy, it is understood that the standards of serviceability of the lintel and the structural elements adjacent to residential doors, should be ensured on all structural requirements.

The February 27 earthquake in Chile caused losses estimated at 30 billion dollars (Chilean Department of the Interior, 2010), prompting the start of an intense activity for updating the design and construction standards in all participating specialties of a project. A case that highlighted the importance of the problem was the collapse of the Alto Rio building in the city of Concepción, located 80 km from the epicenter and considered one of the most affected areas by the earthquake. The reports performed post-earthquake detected errors in the soil classification, underestimation of structural design parameters, and construction flaws (IDIEM, 2010). Accord-

ing to survivors of the residential building collapsed; the mass media; and technical inspections post-earthquake, there was a number of doors and escape routes that literally were not able to be opened at the time of emergency, which led to delays and even failures to comply with evacuation plans (BPnews, 2010; BBC, 2010).

Information records about the causes and consequences of recent earthquakes experienced in the Chilean territory, realize that residential buildings are vulnerable to the action and impact on secondary structural elements, such as lintels and adjacent columns that form the structural framework of a door. Studies sponsored by municipalities of the worst affected areas, as well as volunteer teams of academics and research assistants from diverse Chilean universities (Pontificia Universidad Católica, Universidad de Chile, Universidad de Santiago de Chile, Universidad del Bío-Bío, Universidad de Concepción), validated the observations made in this research, not only in structural engineering, but also in terms of the importance of strengthening the management and control of construction processes and techniques.

1.3 Research Scope

The research proposed in this study contrasts the serviceability and structural approaches, in terms of the problem of obstruction of doors, based on the compliance with Chilean regulations (NCh 433, 2009) and international design codes (ACI-318, 2008), providing quantitative and qualitative information about the behavior of structural and nonstructural systems found in residential accesses (doors).

In order to comply with the scope of this paper, a methodology was developed which consisted of analyzing a full-scale prototype of reinforced concrete, designed according to on-site observations of a number of residential doors along with their confining elements (lintel and walls). Meanwhile, the operability of the door was measured by a quasi-static cyclic loads test, which was complemented with a virtual model created in the SAP2000 software, which allowed studying the serviceability conditions of the system, according to performance thresholds specified by FEMA.

1.4 Research Objectives

1.4.1 General Objective

- To identify and assess the seismic displacement thresholds on the serviceability of residential doors.

1.4.2 Specific Objectives

- To design and build a full-scale seismic framework of reinforced concrete, according to field studies relating to the configuration of residential doors and the elements that confine them.
- To develop and implement a standardized quasi-static seismic test to measure the serviceability of doors.
- To adjust a computational model for nonlinear static analysis “Pushover” to the study conditions.

- To evaluate the theory-experimental seismic behavior of a reinforced concrete frame, designed under the requirements of Chapter 21 of ACI-318 Code 08.
- To measure and compare the levels of structural performance of the system studied, with respect to obstruction of residential doors.

2 LITERATURE REVIEW

During the last century, some authors have studied the causes of structural failures of beams and lintels (Saragoni, 1993; Aguiar and Astroza, 2010; Oyarzo and Griffith, 2010), establishing their origins and considering corrective solutions to rehabilitate those elements. The problem arises because of the effects of cyclic loading on structural elements, which depending on the amount of movement, make materials reach the ultimate limit state capacity, causing the cracking and subsequent collapse. Feriche (1994) studied the effects of damage to buildings due to large earthquakes, achieving characterize seven major types of structural configurations, depending on their degree of vulnerability, including aspects of materiality, height and arrangement. Feriche successfully figured out that in reinforced concrete buildings, for intensities greater or equal to IX on the Mercalli scale, the most common failures were detachment of materials in lintels, provoking double diagonal cracking due to shear effects, involving the obstruction of residential doors.

The scales of seismic magnitude and intensity are measures to determine and predict damage in buildings; however, those measures are not accurate in absolute terms, because the behavior of structures facing seismic events is highly variable. Thus, it is needed to know more precise parameters, either of the structure or of the scenario, aimed to find more accurate results.

In this regard, Ghobarah (1997) describes five levels of damage and performance of reinforced concrete structures (Table 1), based on the relative displacements between consecutive floors of a building. This damage classification responds to the behavior of the reinforcing steel from elastic stage to plastic zone, which determines ductile or fragile failure according to the steel-concrete ratio for different seismic loads.

Table 1 Level of distortion per story for reinforced concrete buildings (Adapted from Ghobarah et al., 1997)

Story Distortion	Damage	Description of damage	Serviceability
$\delta < 0.002$	No damage	No damage	No damage
$0.002 \leq \delta < 0.005$	Slightly damage	SlightlyVisible Cracks	Cracking
$0.005 \leq \delta < 0.011$	Moderate damage	Cracks less than 1 mm	Yield stress of steel
$0.011 \leq \delta < 0.023$	Extense damage	Cracks betweenn 1 and 2 mm	Start of the mechanism
$\delta \geq 0.023$	Complete damage	Cracks greater than 2 mm	Global mechanism

As shown in Table 1, the relationship between damage and the drift of story establishes that a structural element which is subjected to distortions greater than 2.3% will enter a phase of general failure mechanism. Under the same criterion, moderate damage should allow easy opening of a residential door, such as the author's research predicts that the maximum displacement threshold to prevent obstruction of doors ranges from 0.5 to 1.1%.

Based on damage assessed after the February 2010 earthquake in Chile, Aguiar (2010) and Guendelman (2010) investigated the seismic behavior of structural elements in different configurations of buildings in the worst affected areas, estimating the possible causes that triggered the damages. Aguiar (2010) was able to determine all failure patterns found in this earthquake, characterizing foci of study to improve design standards. Regarding the damage in lintels, the author found that in high-rise buildings, there were many cases where the only structural problems were located in the lintels of doors, expressed as diagonal cracks, cover detachment and collapses of corners that led to the obstruction of doors during and post-earthquake. The main cause of this phenomenon is attributed to the poor ratio of shear walls based on the area per story, as well as irregularities in structural configurations, where the lintel plays an important role in terms of energy dissipation (Núñez, 2010).

As known, the lintel is a structural element arranged horizontally as a beam, allowing openings in walls for doors, windows and porches. This element works in conjunction with columns, walls and slabs to take bending and shear forces produced by diverse loads. The materiality of this element is usually concrete with longitudinal and transverse steel reinforcement. It is also very common to find lintels built with light material, such as: wooden walls, gypsum-based panels, glass or combinations among them, whose seismic behavior is different depending on the structural configuration and type of connections used. On the other hand, San Bartolomé and Portocarrero (2001) studied the behavior of lintels in terms of its materiality, using a comparative test between a reinforced concrete lintel and other made with masonry. Among their results, it was found that failure patterns were mainly related to bending, where the concrete beam was a 71% stiffer and 27% stronger than the masonry beam. Therefore, this study established that concrete is actually the best material to be used as lintel, as long as the design and construction criteria be followed in order to reduce the deformation of these elements.

The search for constructive solutions for linking the variables of strength, safety, cost and quality in terms of obstruction of residential doors, requires the creation of innovative alternatives that incorporate improvements into traditional systems. In this regard, Aoki (1984) determined that after an earthquake the residential doors of buildings were locked due to lateral deformations of the structural elements. The main reason was the gap between the door and its respective frame, which typically ranges between 3 and 5mm, being this gap too small to absorb the large deformations produced by an earthquake. His observations allowed establishing basic expressions (Equation 1) based on trigonometry criteria, in order to develop a methodology for estimating the spaces between constituent elements of a door.

$$\frac{\Delta}{H} = \frac{\delta}{h} \approx \frac{\mathrm{a}}{\mathrm{w}} \tag{1}$$

This procedure allows estimating separations door-frame (a), depending on the maximum threshold of relative displacement for which the structure was designed (Δ / H). Also, Aoki (1984) considered the lateral displacement of the door (δ), with respect to its height (h) and its width (w).

The horizontal displacements between stories, determine many aspects of structural design; therefore, there is a need of developing research methodologies that simulate, as best as possible, the real behavior of buildings. One of the main experimental tests used to study seismic events is the quasi-static test or so-called cyclic loading and unloading test, which requires a hydraulic actuator at relatively low speeds, in order to generate patterns quite close to seismic loads, and allowing a better understanding of the seismic behavior and the relationship between shear load and deformation (Molina et al., 1999).

Several authors worldwide have worked with the quasi-static test to study seismic properties, such as: materiality, confinement, arrangement and dimensions, noting for example: Saatcioglu (1991), who implemented this type of test to study the direct relationship between the amount of steel and the effect of diagonal shear failure in reinforced concrete walls; Toloza (2009), who conducted a study of the structural capacity of block masonry walls with reinforced and confined systems, through a cyclic test for a maximum distortion close to 1%; Trevino et al. (2004), who used this methodology to study the importance of the amount and quality of reinforcement for the confinement of masonry walls.

Moreover, Molina et al. (1999), developed studies that provided insights into the effectiveness of this type of test for full-scale specimens, through comparative analysis among quasi-static tests, pseudo-dynamic tests and vibratory tables.

The universality of this experimental methodology has resulted in important contributions to the state of the art of earthquake engineering, primarily focused on the study of the nonlinear range of reinforced concrete to determine the capacity of different structural elements. In 2007, FEMA 461 established protocols to standardize this test and to allow standardized reading results.

On the other hand, the automation of this practice has also brought significant advances from the operational point of view, since in many cases it is not possible to develop a statistically significant number of full-scale prototypes to analyze seismic phenomena. Thus, the software company for designing structures "Computers and Structures, Inc. (CSI)" has developed an application in ETABS and SAP2000 called “Pushover”, which simulates a quasi-static test of load versus displacement, allowing the study of structural capacity in conjunction with the interpretation of the serviceability according to FEMA.

In terms of the differences between the “Pushover” method and experimental tests, Medina (2010) studied the nonlinear behavior of reinforced concrete structures, following the experimental results obtained by Sozen and Gulkan (1971) and Bertero et al. (1974). Among the main results of Medina, it was found that the SAP2000 software allows variations ranging between 10 and 40% below the experimental results, emphasizing that the proximity of data depends directly on the method used (plastic hinges or links).

3 METHODOLOGY

The study of displacement thresholds between stories, responds to a detailed analysis of numerous experimental and theoretical approaches that aim to predict the structural response within an acceptable range, meeting performance and serviceability levels to safeguard the lives of individuals in a building, during and after an earthquake. The present research links structural aspects, based on standardized criteria of serviceability, and focused on obstruction of residential doors, in terms of the behavior of reinforced concrete elements that confine those doors. The following are the steps to achieve the objectives of this research.

3.1 Selecting the Case Study

In the last century, the real estate industry has been adapting its production capacity as population has been growing (i.e. taller buildings, irregular shapes to optimize the utilization of spaces, improved materials, etc.). The "verticalization" of housing has been the solution for the current urban conglomeration in large cities (Machado and Miranda, 2004), which has allowed completely randomized design configurations of departments and especially entrances and exit routes (e.g. doors).

The criteria adopted in this research to select the prototype of study are:

- Level of structural damage recorded after the earthquake of February 27, 2010 in Chile (Figure 1 to 4).
- Interaction of damages with respect to the dislocation and deformation of doors.
- Configuration of entrances to apartments, corresponding to symmetrical frames without the presence of walls perpendicular to the plane of study.



Figure 1 Structural damages affecting deformation of doors

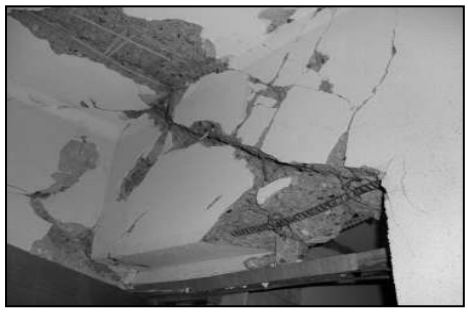

Figure 2 Cracking by shear in lintel



Figure 3 Deflection of lintel above the door



Figure 4 Lack of confinement in lintel

Source (Figures 1 to 4): adapted from DICTUC, 2010.

According to the technical inspections made to the main buildings of Concepcion city and surrounding areas, it was possible to establish a standard frame, according to the three criteria above-described. It was decided to select the configuration corresponding to entrances of apartments located at the end of corridors (Figure 5), which means entrances formed by slender walls or columns of 60 centimeters width, making up the structural frame of the door. The lintels considered an average height of 40 centimeters, for 2.4 meters inter-stories.

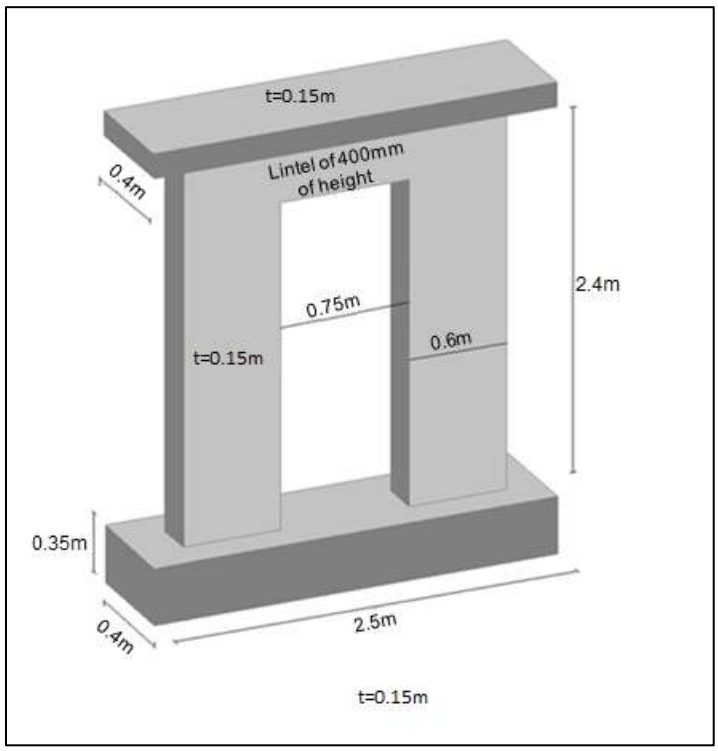

Figure 5 Structural system according to field study.

Note: The system has a slab and foundation with the purpose of anchoring only.

The system presented here includes a residential door with its own lock system, and an average spacing of 5mm between the door and the frame around its perimeter, according to field studies and researches related to the topic (Aoki, 1984).

3.2 Reinforcement of the Structural System

One of the main objectives discussed in this paper is to study the importance of designs, according to current regulations and codes related to reinforcing steel in terms of steel ratio, spacing, and quality. The type of reinforcement of the prototype studied meets the following design criteria:

- Design of reinforcement according to Chapter 21-ACI 318-08.
- Design made with minimum reinforcement ratio for earthquakes, in columns and lintel.
- Design of foundation and slab made to take the loads of the test properly.
- Materials used: Concrete H30-90(20)-0 and steel A63-42H (according to the Chilean codes: Nch204, 1985 and Nch170, 2006).

Consequently, these four criteria allow obtaining a standardized structural system (Figure 6) for objective reading of deformations in the door.

Remarkably, the system was built according to all technical standards in production, assembly and handling of materials.

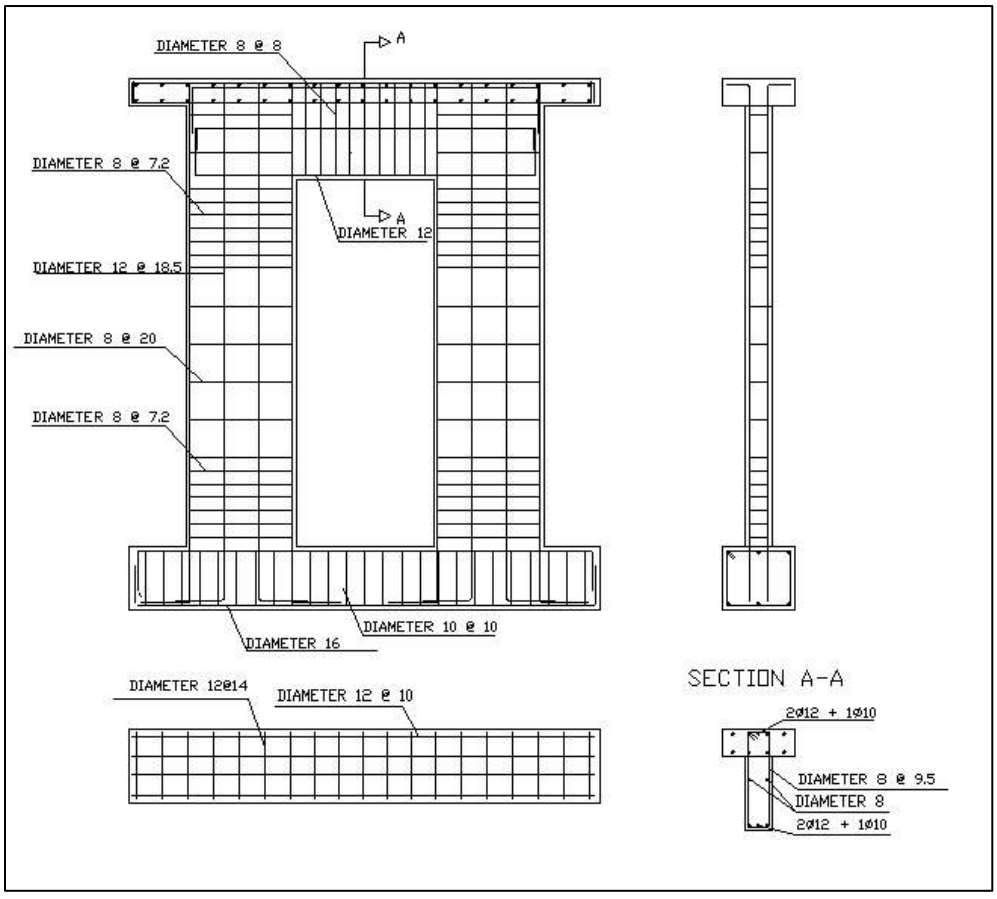

Figure 6 Reinforcement of the prototype.

3.3 Testing of the Structural System

The study of serviceability by developing a cyclic test, allows knowing the behavior of structural elements and how displacement increments affect the obstruction of doors, either by excessive cracks or by lateral distortions.

The experimental work was conducted in the Center for Research in Construction Technology (CITEC, Centro de Investigación en Tecnologías de la Construcción) at the University of Bío-Bío, Chile, using a full-scale testing framework for structural elements. The test protocol included the use of coupling systems, anchoring, control and monitoring, based on studies conducted by previous researchers (Díaz, 2008; Toloza, 2008). The proposed test consisted of subjecting the structural system that confines the door (Figure 7), to excitation seismic loading and unloading using a hydraulic actuator. The actuator was arranged horizontally in a steel frame of 4 meters width and 4 meters height. The testing procedure also included anchoring systems for attaching the top and bottom of the prototype, simulating the actual conditions at the time of a seismic event.

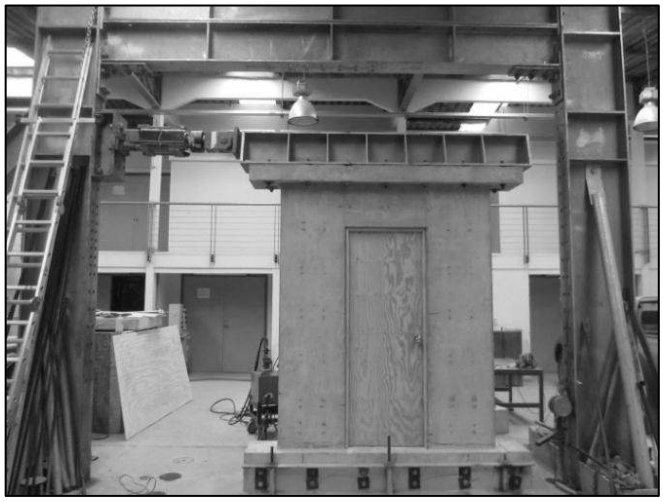

Figure 7 Starting up the test.

The shear force at the top is distributed by incorporating a steel bar anchored to the slab and the head system of the hydraulic actuator, which are aligned with the test frame allowing a stroke for the piston with a maximum development of 25mm "peak to peak". Meanwhile, control and monitoring of the experiment is done through displacement transducers interfaced with a computer for data acquisition and processing of load versus displacement in real time.

3.4 Structural System Virtual Model

The development of a virtual model of the test allows understanding, from a theoretical perspective, the capacity of structural elements to be deformed in function of a given load. This technique make possible to know the history of internal distortions and variations of the mechanical properties of materials, which would not be possible to obtain in an experimental test. Infor-

mation given by the virtual model is what determines the performance levels of a structure, which are then transformed into the serviceability standards defined by FEMA 356.

The virtual model can also automate the quasi-static test for the study of capacity and serviceability of prototypes with different configurations of reinforcement ratios.

The type of model used in this study corresponds to the nonlinear static analysis "Pushover", which provides a scientific tool useful for the study of concrete in inelastic phase, by incorporating plastic hinges defined at the nodes.

Most studies using the "Pushover" method have been quite accurate, offering a high level of representation of seismic behavior, in reinforced concrete buildings (Elnashai, 2001). The software selected to develop the virtual model was SAP2000 v14 according to the following criteria, defined to fit the quasi-static test:

- Model as a bar system for the development of a structural framework. In this sense, Figure 8 shows the structural model implemented.

- The theoretical capacity curve of the framework was obtained from an analytical model of six equivalent bars, where the non-linearity of the materials was incorporated by means of six plastic hinges located at the ends of the bars (Figure 8).

- Model considering inelastic properties by incorporating plastic hinges predefined by FEMA 356 (plastic hinges for confined systems). Figure 9 shows the generalized Force-Deformation (F-D) relationship used for the plastic hinges according to recommendations of FEMA 356. Meanwhile, Table 2 shows the modeling parameters used for the Pushover nonlinear static analysis. Accordingly, the properties of the hinges were defined by considering the recommendations of FEMA 356, for beams and columns controlled by bending, with confined transverse reinforcement.

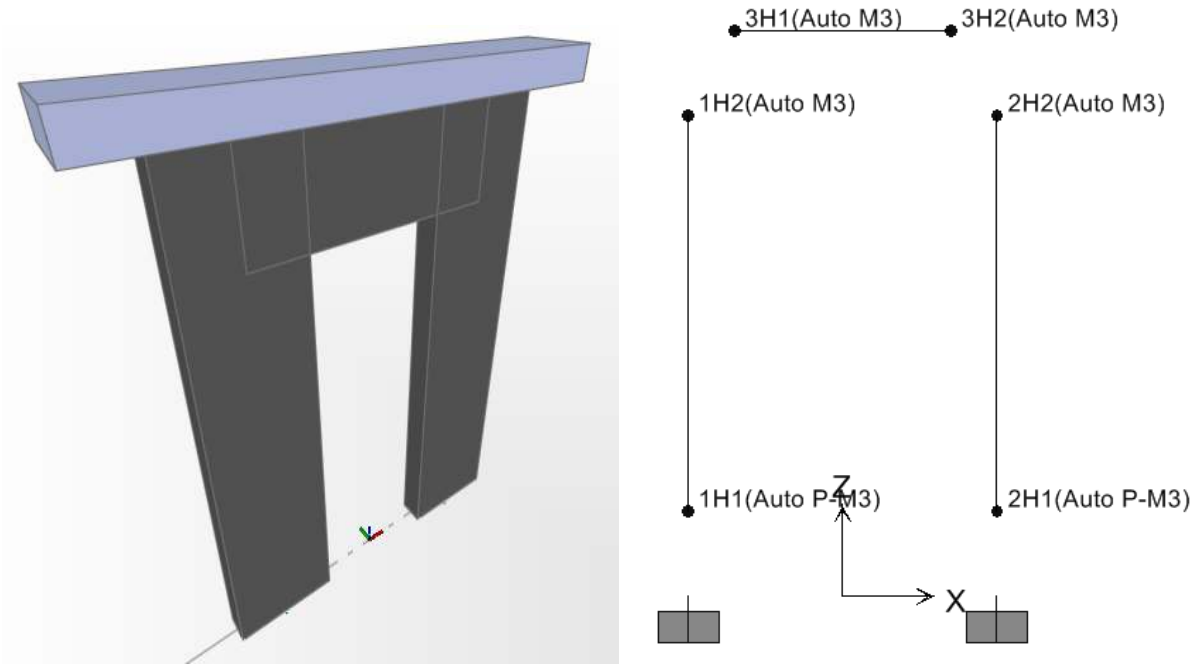

Figure 8 Analytical model representing the studied framework.

- Use of real geometric and mechanical properties, obtaining from the steel and concrete used in the quasi-static test (axial stress and compression respectively).

- The loading pattern of the pushover analysis corresponds to a point load applied horizontally on the upper edge of the frame. The load was increased monotonically until the required control movement was reached. The displacement of control used was the horizontal located on the top edge of the frame, with a magnitude of 25 mm, because it was sought to reach displacements similar to those generated by experimental testing.

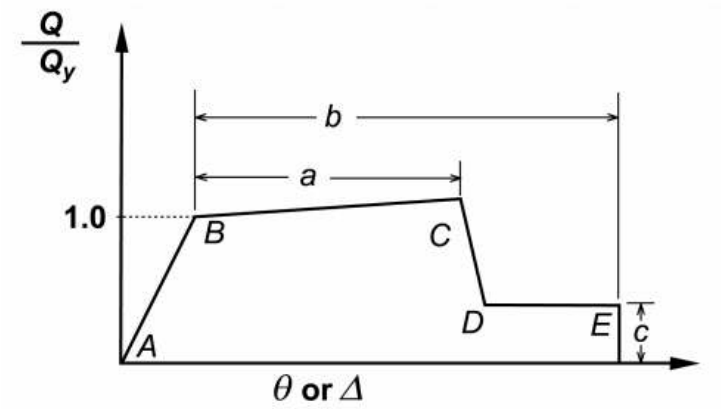

Figure 9 Generalized Force-Deformation (F-D) relationship used for the plastic hinges according to recommendations of FEMA 356.

Table 2 Modeling parameters for nonlinear procedures – Reinforced concrete beams and columns (adapted from FEMA 356).

Element	Conditions		Modeling Parameters		
			Plastic Rotation Angle (radians)		Residual Strength Ratio
			A	B	C
Beam	$\frac{\rho-\rho'}{\rho_{bal}}$ ≤ 0	$\frac{V}{A_g\sqrt{f'c}}$ ≤ 3	0.025	0.05	0.2
Column	$\frac{P}{A_g\sqrt{f'c}}$ ≤ 0	$\frac{V}{A_g\sqrt{f'c}}$ ≤ 3	0.02	0.03	0.2

In summary, this model responds to the representation of a seismic framework designed and confined according to all the specifications of ACI-318-08 code, adjusted to the conditions of the quasi-static test proposed.

3.5 Serviceability and Structural Approach for Interpretation of Results

For discussion of results from the structural point of view, the levels of displacements achieved by the prototype are related to the level of damage, to finally contrast it with the specifications of the codes considered.

In contrast, serviceability in terms of deformation is interpreted according to the protocols of thresholds defined by FEMA 356 for columns and beams (Table 3). In line with the study of the functionality of the door for each displacement cycle, FEMA provides three main levels of performance:

IO (Immediate Occupancy): After a seismic event, the damage is very limited. The structural elements retain most of their geometrical and mechanical properties. The risk of injury to people is very low and the structural system does not need to be repaired before being reoccupied.

LS (Life Safety): The overall damage is moderate. Although some structural elements can be seriously damaged, the global structure is not compromised. Debris detachment is not evidenced. Injuries can occur to people during an earthquake, but the risk of loss of life is generally low.

CP (Collapse Prevention): At this level of performance, there is severe damage to almost all the structural elements even for gravity loads, but without compromising the collapse of the global structure. There are significant displacements and fall of debris; therefore, the risk of loss of life for occupants is high.

Table 3 Thresholds of serviceability for lintel beams and columns according to FEMA 356.

SERVICEABILITY FOR LINTEL BEAMS						
Conditions		Allowable parameters (Rotation in Radians)				
$\frac{\rho-\rho'}{\rho_{bal}}$	$\frac{V}{A_g\sqrt{f'c}}$	IO	Primary elements		Secondary elements	
			LS	CP	LS	CP
≤ 0	≤ 3	0.01	0.02	0.025	0.02	0.05
SERVICEABILITY FOR COLUMNS						
Conditions		Allowable parameters (Rotation in Radians)				
$\frac{P}{A_g\sqrt{f'c}}$	$\frac{V}{A_g\sqrt{f'c}}$	IO	Primary elements		Secondary elements	
			LS	CP	LS	CP
≤ 0.1	≤ 3	0.005	0.015	0.02	0.02	0.03

Table 3 shows a summary of the allowable thresholds of serviceability defined by FEMA for each performance level, in terms of the internal rotation of lintel beams and columns, whose values are shown for the reinforcement ratio and shear for the experimental test. The serviceability

approach proposed here consisted of identifying, within the virtual model, each of these levels of performance (associated with the displacement at the top), which are compared with the actual damage in the structure, as different load levels are applied to the system under study.

One of the main protocols that are required for proper performance and interpretation of quasi-static tests is the monitoring of the history of displacements applied to systems, whose emphasis is on the development of progressive displacements in time, for proper analysis and record of deformations, cracks and lateral distortions of the door in study. Therefore, the protocol used corresponds to that stated by FEMA 461 (Figure 10), for reinforced concrete elements, which follows a geometric progression of ratio 1.4 within a range of 0.5 to 28.3mm.

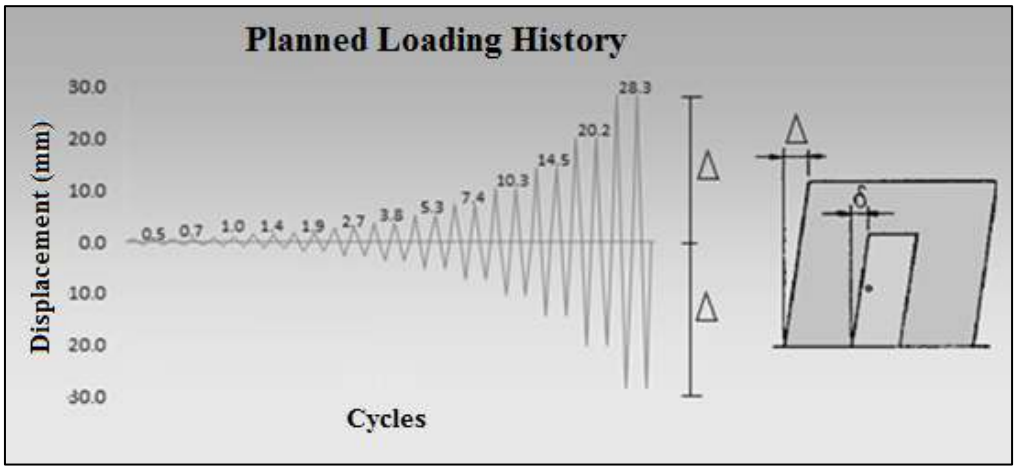

Figure 10 Protocol of planned displacements according to FEMA 461.

4 RESULTS

In terms of this study, the importance of the interpretation of results is mainly the pursuit of certain relationships between the quasi-static experimental approach and the theoretical approach "Pushover", in order to obtain a validated prediction of inelastic behavior of structures associated with seismic events, which determine the functionality of residential doors.

4.1 Results of Theoretical and Experimental Structural Capacity

From the experimental viewpoint, the quasi-static test developed 13 levels of displacement up to a maximum relative distortion of 1%, thereby allowing the interaction of the structural elements in the non-linear range, as well as important lateral distortions of the door frame at the top, bottom and at the level of the lock.

Loading pulses were applied progressively and gradually over time, in order to obtain a similar number of data for each level of displacement, whose magnitudes are harmoniously adapted to the protocol previously-defined by FEMA 461.

The structural capacity reached by the study system is shown in Figure 11 (Experimental Capacity Curve), in contrast to the theoretical capacity obtained by the theoretical "Pushover" method (Theoretical Capacity Curve). The hysteresis curve obtained shows a symmetric behavior

of the response variable for positive and negative directions, allowing the reading of the elastic region in the early stages of displacement, which gradually are degraded beyond magnitudes close to 10 tons of shear force. Therefore, the hysteresis curve in the envelope of the peaks represents the actual structural capacity obtained from the prototype in study.

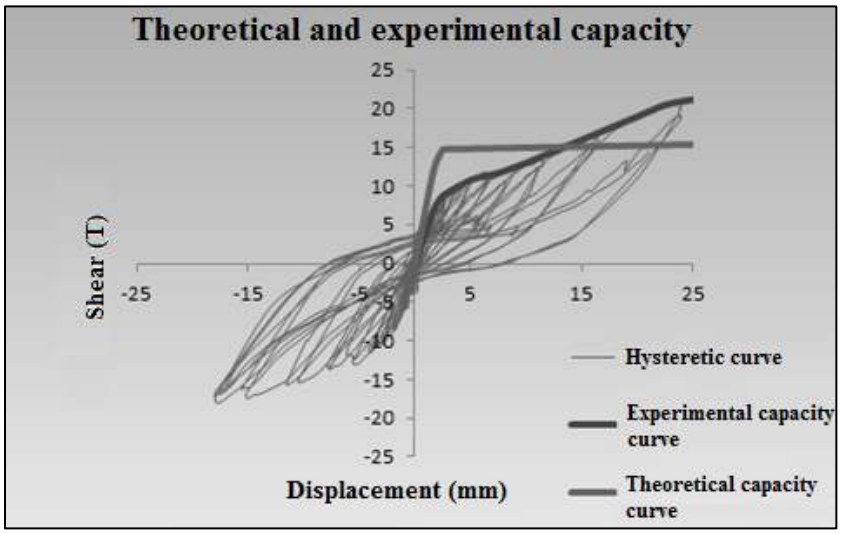

Figure 11 Structural Capacity of the theoretical Pushover model versus the Experimental Capacity.

However, the structural capacity of the theoretical "Pushover" model obtained by systems of plastic hinges, shows differences in ductility within the elastic and plastic phases. By way of example, while both methods begin their non-linear range for the same level of displacement (2.5mm of relative distortion), the experimental test does it for a load 30% lower.

In summary, the structural approach of the prototype response can be studied as a correlation, which concludes that the results of theoretical capacity represent an 85% of the actual average capacity obtained. In terms of serviceability, this means that the thresholds for performance levels delivered by the "Pushover" method are also governed by this variability. However, these differences comply with the acceptable ranges proposed by Medina (2010) for studies of capacity in quasi-static tests versus the "Pushover" method.

4.2 Results and analyses of serviceability

The study of serviceability involves the analysis of structural performance thresholds, relating the allowable displacements of each level with respect to the actual behavior of the residential door and the elements that confine it. These results obtained by the "Pushover" method, show ranges of lateral displacements of the system, for which it is expected a given performance level, i.e., they predict at a theoretical level the response of the degree of cracking as applied loads increase.

4.2.1 Performance levels obtained according to FEMA 356

Performance levels shown in Table 4 are obtained directly from the curve of theoretical capacity delivered by SAP2000, which depending on the behavior of concrete (linear or nonlinear) develop internal deformations in the plastic hinges involving lateral distortions between elements (lintel and/or columns), resulting in cracking and subsequent detachment of material.

Table 4 Thresholds for levels of performance.

ELEMENT	LINTEL			WALLS		
Levels of Performance	IO	LS	CP	IO	LS	CP
Displacement (mm)	27.5	53.7	64.1	14.11	38.95	51.37
Distortion Δ/H	0.011	0.022	0.027	0.006	0.016	0.021

According to this approach, for the maximum displacement of 25mm achieved in the quasi-static test, the lintel did not exceed the first level of performance, being totally free of cracking. For its part, the displacements of walls implied an intermediate state between the first two levels of performance, with moderate cracking in these structural elements. In terms of the door, the "Pushover" method predicted that for this level of displacement, the cracking in columns would affect the deformation of the door frame, either by lateral distortions or by small detachments of material, which eventually could have contributed to the separation door-frame.

4.2.2 Discussion of the behavior of the door and cracking during the test

The auditory and visual results collected during the test (Table 5), established the sequential behavior of the prototype for each shift pulse, which allows interpreting the extent of experimental damages for each of the performance ranges. The protocol used for obtaining these experimental results, consisted of measuring the cracking and assessing of the door then for each loading cycle.

Table 5 Record of damages in the prototype during the test.

Cycle	Real displacement (mm)	Drift (%)	Width of crack (mm)	Damage description
1	0.53	0.022	0	No damage
2	0.76	0.032	0	No damage
3	0.92	0.038	0	No damage
4	1.4	0.058	0	No damage
5	1.84	0.077	0	No damage
6	2.71	0.113	0.3	Door creaks slightly
7	3.5	0.146	0.5	Horizontal cracking begins at the bottom of the walls
8	5.4	0.225	0.5	Slightly diagonal shear cracks on top corners of the door.
9	6.71	0.279	0.5	Small deformations in the door frame
10	8.98	0.374	0.7	Door begins evidencing some small distortions at the lock.
11	11.3	0.471	1	Significant lateral distortions at the edges, including the impact of the door against the frame
12	18.3	0.762	1	Columns, frame and door creak, with widespread cracking
13	25	1.04	1	Excessive spacing between door and frame, along with deformations outside the plane. Full loss of the orthogonality of elements.

The breakdown of damages obtained experimentally can be contrasted with the theoretical results of performance, provided by FEMA 356 as described above in Table 4. In fact, the final cracking of the walls after the test, corresponded to acceptable cracks by shear effect in the upper corners along with slightly detachment of material at the bottom (Figure 12 and 13 respectively), adjusting perfectly to the level "LS" predicted by the “Pushover” method. Also, the lintel did not show visible cracks, coinciding well with the expected theoretical response. Finally, the test made evident that for a lateral displacement of 14 mm, the door is no longer operational, showing anomalies due to excessive spacing (Figure 14), deformations out of plane, deficiencies at the level of the lock (Figure 15) and flattening of the frame. The lateral displacement of 14 mm is divided by the frame height of 2400 mm, giving a structural drift value of 0.583% $\approx$ 0.6%, for which the door is no longer operational.



Figure 12 Cracking in the corner.



Figure 13 Cracking at the bottom.

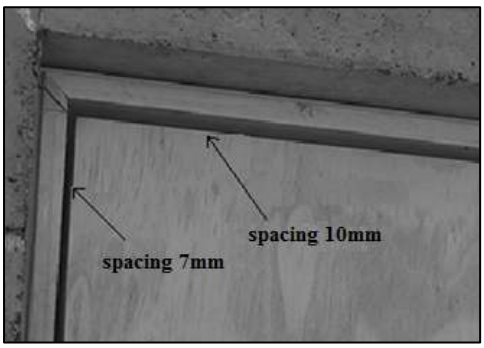

Figure 14 Distortions in the door.



Figure 15 Distortions in the lock.

4.2.3 Comparative analysis of experimental structural performance according to Ghobarah et al. (1997)

The research proposed by Ghobarah et al. (1997) in Table 1, basically pointed to the categorization of damage according to lateral distortions of reinforced concrete elements, whose magnitudes are compared with the results presented in this paper (Table 6). Using this procedure, it is possible to correlate the average thickness of cracks obtained in the test, in order to extrapolate and interpret the eventual degree of cracking, which would be expected for the system, when applying displacements greater than 25mm.

Table 6 Damage description by Ghobarah et al. (1997) versus observed damages.

Story distortion	Equivalent lateral displacement (mm)	Damage description according to Ghobarah (1997)	Description of observed damages in this study
$\delta < 0.002$	4.8	No damage	Cracks of 0.1mm by diagonal shear in the lintel
$0.002 \leq \delta < 0.005$	4.8 – 12	Slightly visible cracks	Cracks of 0.1mm by diagonal shear in the lintel and borders
$0.005 \leq \delta < 0.011$	12 - 26.4	Cracks less than 1mm	Maximum cracks of 1mm
$0.011 \leq \delta < 0.023$	26.4 – 55.2	Cracks between 1 and 2mm	-
$\delta \geq 0.023$	≥ 55.2	Cracks greater than 2mm	-

Comparing the spectrum of damages defined by Ghobarah et al. (1997), with the real cracking obtained in this study, it is possible to visualize that there is similarity between both approaches, at least for the first three levels defined by that author. It is therefore possible to deduce that the system under study could have had an average thickness of cracks greater than 2mm, if the lateral distortion had reached 50mm.

In terms of serviceability, due to the high similarity of approaches analyzed, it is possible to infer that according to the 14 mm involving the loss of functionality of the door in the system studied, the maximum distortion which limits the proper operation of a residential door would be 0.6%, independent of its size and configuration.

4.2.4 Comparative analysis of serviceability of doors according to Aoki (1984)

According to the equations proposed by Aoki (1984), there is a geometric relationship able to predict the design spacing that should be considered for the door with respect to its frame (Equation 1), whose design criterion corresponds to the maximum expected distortion between stories of a residential building.

By applying the numerical method proposed by that author, the following is obtained for the present study:

- Spacing used between the door and the respective frame (a): 5 mm.
- Width of the door used in the test (w): 700 mm.

Therefore,

$$\frac{\Delta}{H} = \frac{\delta}{h} \approx \frac{a}{w} = \frac{5}{700} = 0.7\% \tag{2}$$

The methodology proposed by Aoki (1984), indicates that for the dimensions used in the test, the obstruction of the door would occur for a distortion between stories of 0.7% (as shown in Equation 2), in contrast to the 0.6% obtained experimentally. Accordingly, the method of that author allows a correct approach to design the spacing between the door and its respective frame, depending on the maximum displacements for which the residential structures are designed.

By way of example, the Chilean Code NCh 433 (of. 1996 Mod. 2009), establishes a threshold of maximum relative displacement between consecutive stories of 0.2%, which according to Table 7, should ensure the proper opening of doors from 60 to 95cm width, considering a door-frame spacing between 2 and 8mm, since for all commercial conditions, the "drift" which would lock the door is greater than the 0.2% (regulated). However, field studies indicate that even for spacings of 5 mm, the doors ceased to be operational during and after the earthquake of February 27, 2010 in Chile. Therefore, this phenomenon is immediately attributed to excessive displacements beyond the allowable values.

Table 7 Maximum distortions for doors of different dimensions.

Door-frame spacing (mm)	Maximum distortions for obstruction of doors (%)							
	Width of the door (cm)							
	60	65	70	75	80	85	90	95
2	0.333	0.308	0.286	0.267	0.250	0.235	0.222	0.211
3	0.500	0.462	0.429	0.400	0.375	0.353	0.333	0.316
4	0.667	0.615	0.571	0.533	0.500	0.471	0.444	0.421
5	0.833	0.769	0.714	0.667	0.625	0.588	0.556	0.526
6	1.000	0.923	0.857	0.800	0.750	0.706	0.667	0.632
7	1.167	1.077	1.000	0.933	0.875	0.824	0.778	0.737
8	1.333	1.231	1.143	1.067	1.000	0.941	0.889	0.842

Figure 16 shows a comparison among: (1) the serviceability criteria for doors specified by Aoki (1984); (2) those given by the Chilean standard NCh433 and; (3) the values found experimentally in this study for doors of 70cm wide.

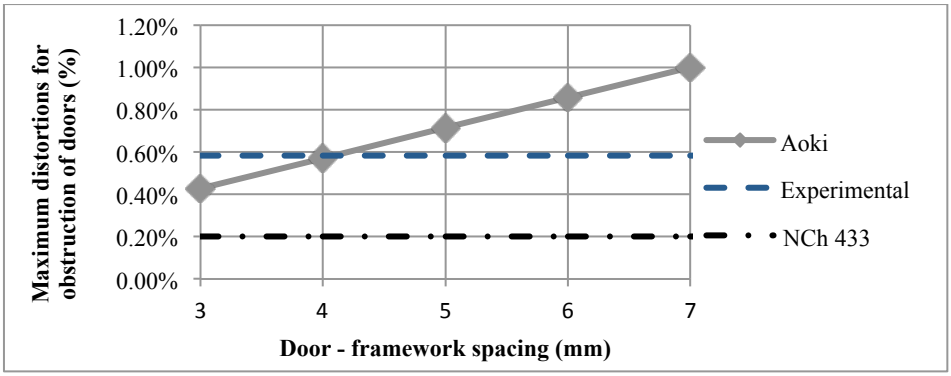

Figure 16 Comparison of maximum distortions for obstruction of doors (70cm wide), among: Aoki (1984) criteria; Chilean standard NCh433 and; Experimental values of the current study.

As seen in Figure 16, the distortions found experimentally were close to those proposed by Aoki (1984), for a 4mm framework spacing. On the other hand, it is observed that the requirements of Chilean standard NCh433 are conservative in comparison with the experimental evidence and the proposal values of Aoki (1984). Also, it is important to emphasize that the steel reinforcement of the structural framework tested was detailed according to the seismic frame requirements defined by the ACI 318 standard code. Based on this fact, it could be hypothesized that if the steel reinforcement of the structural framework is less demanding, it is probable to obtain similar values of maximum distortion for the three serviceability criteria for doors.

4.3 Capacity and serviceability for different levels of reinforcement ratios and confinement

The research proposed in this study includes the analysis of the structural capacity for diverse steel configurations, within the same geometry of the case studied. The reinforcement ratios shown in Table 8 (with its corresponding nomenclature) correspond to steel bars commonly used in the construction of this type of walls. Importantly, for each type of longitudinal bar of 12, 16 and 18mm respectively, a study of the influence of the transverse confinement by stirrups designed correctly by the ACI-318-08 is presented.

Table 8 Additional configurations analyzed.

Configuration	Longitudinal diameter of bars in walls (mm)	Reinforcement ratio (%)	Transverse confinement	Nomenclature assigned
1	12	1	Yes	12D C
2	16	1.78	Yes	16D C
3	18	2.26	Yes	18D C
4	12	1	No	12D NC
5	16	1.78	No	16D NC
6	18	2.26	No	18D NC

Note: C means walls with transverse confinement.
NC means walls without transverse confinement.

The six configurations shown in Table 8, allow a theoretical study by using the "Pushover" method of variations in the capacity of structures, according to longitudinal reinforcement and stirrups in confining areas. Those variations in capacity are shown as spectra in Figure 17, using the same nomenclature of Table 8. Modeling protocol was identical for each of them, allowing the reading of the strength of each system, for equal levels of displacement.

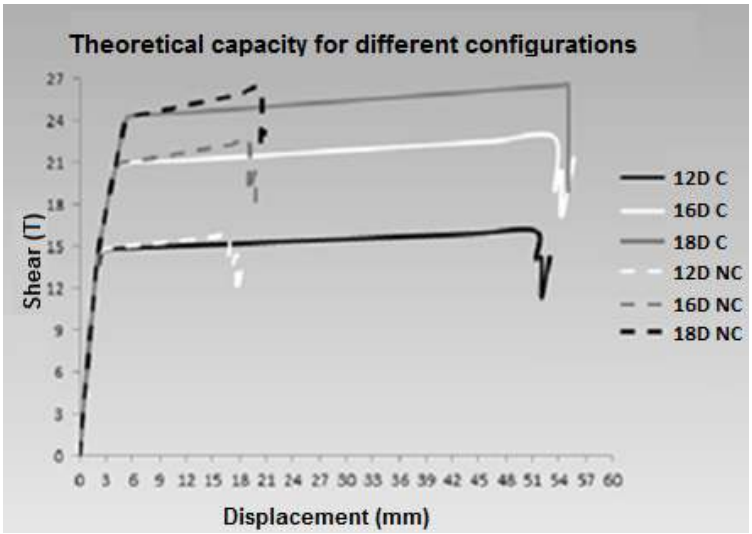

Figure 17 Theoretical capacity for different steel configurations.

It follows from the results obtained by the Software SAP2000, the importance of the confinement for developing of the capacity, in terms of displacement levels. Approximately, for a 20mm distortion, the non-confined structural elements (12D NC, 16D NC and 18D NC) can easily reach the failure zone after having experienced a very similar behavior in their early stages. Note that, the quality of material, geometry and reinforcement of the lintel, were the same for each configuration. Although the theoretical capacity analysis of the main system of study evidenced some variations with respect to the experimental test, it was possible to identify that for these 6 additional configurations, unconfined models (modeled with pre-defined plastic hinges without shear), only admit deformations equivalent to 30% of their counterparts confined, where these confined models reached the rupture zone at displacements close to the 50-60mm. As the main result of the use of non-contained elements, it was found that early rupture of the concrete would allow detachment of material during a seismic event, provoking deflections and lateral distortions of the door frames for displacements much lower than those experienced by elements confined properly.

5 CONCLUSIONS

The development of the structural system in study revealed significant quantitative and qualitative aspects of performance and structural capability, including variables that are not traditionally measured in the field of earthquake engineering, particularly from the perspective of residential doors.

The case study proposed in this research was successfully made according to the design and construction criteria used by the real estate industry in residential buildings, in terms of sizing and layout of all elements, as well as topics related to the connection between door and frame.

The development of the quasi-static test was adjusted to all the standards defined by FEMA 461, for control and monitoring of effective displacements of structural elements. For their part, the connections and anchoring systems successfully met their function of embedment and stiffness

to prevent displacements orthogonal to the plane and excessive uprisings that possibly could have altered the results of serviceability of the door. Regarding with the analysis conducted with the "Pushover" method to predict the response of the test, a correlation of 85% was obtained with respect to the actual capacity of the system studied, which fits with typical ranges of variability in quasi-static tests found in the literature. Thus, it was possible to use the methodology of non-linear static analysis "Pushover", as a very good tool for predicting the response of structures facing seismic events.

Moreover, this study allowed analyzing the importance of the confinement of structural elements, since for displacements even five times greater than the maximum allowable values, the degree of fracture and deformation are very limited and fully recoverable with simple rehabilitation techniques, when confinement has been made adequately. It was possible to show that the criteria such as: spacing, bending diameters, seismic hooks, material handling, among others, are factors that actually determine the strength needed to mitigate the damage to the structure. It is therefore possible to infer that the confinement of the structural elements has a direct relationship with the damage on residential doors and their obstruction in an earthquake.

The study of the serviceability of structural elements and lateral distortions of door matched the theoretical and experimental approaches. Measuring the deformation of the door allowed establishing that the obstruction of it, just starts at 14mm, equivalent to three times the maximum distortion between stories defined by codes considered. Consequently, according to a number of records of doors blocked during earthquakes, it follows that the obstruction of those doors occurred due to structural failures which allowed going beyond the design thresholds in terms of displacement. Also, it was possible to relate this phenomenon to the absence of the confinement of the collapsed structures (as found through the field study), which possibly could have improved their capacity following the confinement requirements previously-described. An example that supports this hypothesis was reflected in the differential thresholds for fracture, taken from the comparative analysis of the six configurations virtually modeled, which emphasize the importance of this concept. It was found that confined elements lose their integrity just for displacements even 3 times higher than those traditionally reinforced without confinement.

The structural performance levels defined by FEMA 356, made possible to corroborate that when a structure is designed adequately and subjected to the displacements in study, a "Life Safety" condition is reached for columns, which means small damages only and fully recoverable with simple techniques of seismic rehabilitation. Concerning the state of the lintel after the test, this one did not show visible cracking, adjusting to the predicted level delivered by the "Pushover" method, that is, "Immediate Occupancy". With respect to damages manifested in the door, it was observed that during the maximum peaks of displacement, the whole door-frame system presented lateral distortions, recovering its early condition when the test was over, with minor damages in the hinges only.

From the standpoint of the performance levels defined by Ghobarah et al. (1997), the distortions between stories followed the same pattern of damages based on the width of the cracks, as well as the criteria and equations defined by Aoki (1984) for the spacing between the door and its frame in terms of displacement. In this research, through the combined use of the "Pushover"

method, the quasi-static test and previous findings of other authors, it has been demonstrated that the drift, which determines the obstruction of residential doors, varies between 0.6 and 0.7%.

In summary, the study of the capacity and serviceability, in the obstruction of residential doors, has allowed defining a realistic approach to the importance of designing and building elements around entrances and exit routes, in order to avoid the obstruction of doors, with the potential risk for people facing an earthquake.

References

ACI 318 (2008), "Building Code Requirements for Structural Concrete and Commentary", American Concrete Institute, USA.

Aguiar, R. (2011), "El mega sismo en Chile 2010", Revista Internacional de Ingeniería de Estructuras, 16 (1), 1-38, Mexico.

Aguiar, R., Astroza, M., Játiva, J y Cabrera, Elvin. (2010). "Dos Lecciones Sismológicas del Mega Sismo de Chile de 2010 a ser Tomadas en Cuenta en Estudios de Peligrosidad en el Ecuador", XXXIV Jornadas Sudamericanas de Ingeniería Estructural, Universidad de San Juan, Argentina.

Aoki, K. (1984), "Door for buildings", US Patent 4.429.495, Tokyo, Japan.

BBC, "Terremoto en Chile: Testimonios en Primera Persona. http://www.bbc.co.uk/mundo/america_latina/2010/02/100227_chile_terremoto_testimonios.shtml. March 7, 2010. Accessed on November 1, 2011.

Bertero, V., Popov, E. P. and Wang, T. Y. (1974), "Hysteretic Behavior of Reinforced Concrete Flexural Members with Special Web Reinforcement", EERC Report No UCB/EERC-74/9, University of California, Berkeley, USA.

BP News. "El terremoto del 2010 en Chile: Lo vi venir" Marzo 201. http://www.bpnews.net/bpnews.asp?id=34819. Accessed on April 5, 2011.

Castillo, C. "Terremoto 2010 en Chile, Cónica del día Sábado 27 de Febrero, 28 de febrero del 2010. http://manzanamecanica.org/2010/02/especial_terremoto_2010_en_chile_ cronica_del_dia_ sabado_27_de_febrero.html. Accessed on December 1, 2011.

Computers and Structures, 2009, SAP 2000, Version 14.1.

Del Río Bueno, A. (2008), "Patología, reparación y refuerzo de estructuras de hormigón armado de edificación", E.T.S. Arquitectura (UPM), Madrid, Spain.

Diaz, J. (2008), "Modelación experimental de muros de albañilería", Thesis for obtaining the professional degree of Civil Engineer, Departamento de Ingeniería Civil y Ambiental, Universidad del Bío-Bío, Concepción, Chile.

DICTUC (2010), "Inspección visual y Levantamiento de Daño Edificio Torre O'Higgins-Concepción", Informe Nº 906581/10-056-EE-01-R0, Concepción, Chile.

Elnashai, A.S. (2001), "Advanced inelastic static (Pushover) analysis for earthquake applications", Struct. Eng. Mech., 12(1), 51-69, USA.

Esteva, L. (1988), "The Mexico Earthquake of September 19, 1985 Consequences, Lessons and Impact on Research and Practice", Earthquake Spectra, Vol. 4, 3:413-426, USA.

FEMA 356 (2000), Federal Emergency Management Agency, "Prestandard and Commentary for the Seismic Rehabilitation of Buildings", Washington D.C., USA.

FEMA 461 (2007), Federal Emergency Management Agency, "Interim Testing Protocols for Determining the Seismic Performance Characteristics of Structural and Nonstructural Components", Washington D.C., USA.

Feriche, M. (1994), "Daños producidos por terremotos". Instituto Andaluz de Geofísica y Prevención de Desastres Sísmicos, Granada, Spain.

Ghobarah A., Aly N., and El-Attar M. (1997), "Performance level criteria and evaluation. A critical review of proposed guidelines. Seismic design methodology for the next generation of codes". Fajfar and Krawinkler Editors, Balkema, Sloveni.

Guendelman, T. (2010), "Efectos del Sismo en las Edificaciones", Santiago, Chile

Gulkan, P., and M.A Sozen (1974), "Inelastic Response of Reinforced Concrete Structures to Earthquake Motion", ACI Journal, No. 12, Vol. 71, pp 604-610, USA.

IDIEM (2010), "Informe del Edificio Alto Río", Concepción, Chile.

Lay, T., C. J. Ammon, H. Kanamori, K. D. Koper, O. Sufri, and A. R. Hutko (2010), "Teleseismic inversion for rupture process of the 27 February 2010 Chile (Mw 8.8) earthquake", Geophys. Res. Lett., 37, L13301, doi: 10.1029/2010GL043379, Chile.

Machado, J.R y Miranda, C. (2004), "La verticalización como resultado material de la incorporación inmobiliaria en Maringá-Paraná". Ediciones Universidad del Bío Bío, 57-67, Chile.

Medina, E.J. (2010), "Evaluación de métodos de análisis inelástico en SAP para estructuras de hormigón armado". M. Sc. Thesis, Escuela de Ingeniería, Pontificia Universidad Católica de Chile, Santiago, Chile.

Meli, R. (1994), "Mampostería estructural. La práctica, la Investigación y el Comportamiento sísmico Observado en México", Cuaderno de Investigación Nº 17, Centro Nacional de Prevención de Desastres, 3-23, Mexico.

Molina, F.J. et al., (1999), "Ensayo Sísmico de Estructuras", Física de la Tierra (UCM), Madrid, Spain.

NCh433, (2009), Norma Chilena NCh433*,* "Diseño sísmico de edificios", Instituto Nacional de Normalización (INN), Chile**.**

Nuñez, M. A. (2010), "Análisis de los daños provocados por el terremoto del 27 de febrero de 2010 a los edificios de Villa Cordillera, comuna de Rancagua". Facultad de Ciencias Físicas y Matemáticas, Departamento de Ingeniería Civil, Universidad de Chile.

Rojas F, Naeim F, Lew M, Carpenter LD, Youssef NF, Saragoni GR, Adaros M. (2010), "Performance of tall buildings in Concepción during the 27 February 2010, Moment Magnitude 8.8 offshore Maule, Chile Earthquake", The Structural Design of Tall and Special Buildings. DOI: 10.1002/tal.674, Chile.

Saatcioglu 1991, M. (1991), "Hysteretic Shear Response of Low-rise Walls", Concrete Shear in Earthquake International Workshop on Concrete Shear in Earthquake, Edited by Hsu, T.C.C. nad Mau., Texas, 105-114, USA.

San Bartolomé, A. and Portocarrero, F. (2001), "Estudio Comparativo del Comportamiento de una Viga de Albañilería y una Viga de Concreto", Pontificia Universidad Católica del Perú, Lima, Peru.

SAP 2000 V14 "Manual de Análisis no Lineal Estático Pushover Usando SAP2000 v14". MECE Aneuris Hernández Vélez Dealer, CSI, 2-67, Puerto Rico.

Singh, S. K. y Ordaz, M. (1994), "Sismicidad y movimientos fuertes en México: una visión actual", Cuadernos de Investigación, No 18, Centro Nacional de Prevención de Desastres, Mexico.

Subsecretaría del Interior (2010), "Información dada a los medios de comunicación el 15 de mayo de 2010", Santiago, Chile.

Toloza, E. (2008), "Implementación y puesta en marcha de ensayos de muros de bloques de hormigón a escala real", Thesis for obtaining the degree of Civil Engineer, Departamento de Ingeniería Civil y Ambiental, Universidad del Bío Bío, Concepción, Chile.

Treviño, E., Alcocer, E., Flores, L., Larrua, R., Zarate, J. y Gallegos, L. (2004), "Investigación experimental del comportamiento de muros de mampostería confinada de bloques de concreto sometidos a cargas laterales

cíclicas reversibles reforzados con acero de grados 60 y 42", XIV Congreso Nacional de Ingeniería Estructural. Sociedad Mexicana de Ingeniería Estructural. Acapulco: Editorial SME, Mexico.