ORIGINAL ARTICLE

lajss.org© Latin American Journal of Solids and Structures

www.lajss.org

Experimental Investigation of Shear Transfer in Precast Lightweight Concrete Sandwich Slabs with Demountable Bolted Steel Shear Connectors

Rana H. Alkerwei [a,b*], SA Osman [a], Ammar N. Hanoon [c], Ahmed W. Al Zand [d]

[a] Department of Civil Engineering, Faculty of Engineering & Built Environment, University Kebangsaan Malaysia (UKM), 43600 Bangi, Selangor, Malaysia. Email: p115460@siswa.ukm.edu.my, saminah@ukm.edu.my.
[b] Civil Engineering Department, College of Engineering, Mustansiriyah University, Baghdad, Iraq. Email: rana.alkerwei@uomustansiriyah.edu.iq.
[c] Civil Engineering Department, College of Engineering, Baghdad University, Baghdad, Iraq. Email: anh.uobaghdad.edu.iq
[d] Department of Design, College of Fine Arts, Al-Turath University, Baghdad, Iraq. Email: ahmed.zand@uoturath.edu.iq

* Corresponding author

https://doi.org/10.1590/1679-7825/e8391

Abstract

In this study, three types of bolted shear connectors (I, V, and X type) were proposed. Push-out tests were performed to investigate the shear behaviour of the Precast Lightweight Concrete Sandwich Slab (PLCSS), whose layers were connected by the suggested connectors. Nine specimens of PLCSS were fabricated and tested, and they were distributed into three groups. Each group included three identical specimens for each type of shear connector. The primary parameter considered in this work was the type of shear connector and its effect on the failure mode. The structural behaviour considered load vs relative displacement (between the top and bottom layer), stiffness, ductility, and deformation index. The proposed shear connectors showed a variance in terms of strength, ductility, hardness, deformation index, and absorbed energy values. The highest values of shear strength were for specimens with X-connectors. In addition to their advantage of the ease of fastening or re-dismantling, the bolted shear connectors showed good compatibility with the fabrication of such a composite lightweight concrete element that demonstrates high shear resistance.

Keywords

Push out, Sandwich slab, Demountable connectors, Bolted shear connectors, Lightweight concrete.

Graphical Abstract

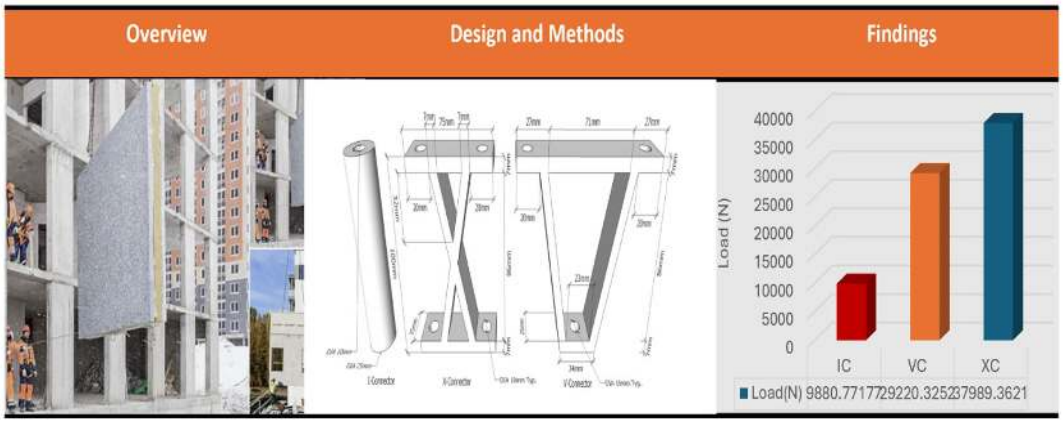

Received October 02, 2024. In revised form August 06, 2025. Accepted August 06, 2025. Available online August 08, 2025.
https://doi.org/10.1590/1679-7825/e8391

Latin American Journal of Solids and Structures. ISSN 1679-7825. Copyright © 2025. This is an Open Access article distributed under the terms of the Creative Commons Attribution License, which permits unrestricted use, distribution, and reproduction in any medium, provided the original work is properly cited.

1 INTRODUCTION

The current structure industry demands simplicity and rapidity of construction, encouraging research into prefabrication of lightweight structural elements; concrete sandwich panels are one of the new technologies that meet some of these constraints. A sandwich panel is a structure that consists of three layers: a low-density core layer placed between two thin skin layers, and all three layers are bonded together by connectors Lee and Pessiki (2007). Sandwich panels are used in construction as precast components known as Precast Concrete Sandwich Panels (PCSP), and they combine the advantages of lightweight structural members and precast technology, so these panels are designed for the required ratio of strength to weight and are typically used in the construction of walls and roofs. Precast concrete sandwich panels' (PCSPs) weight and thickness must be lowered to make them suitable for a wider variety of structures; hence, there has been a noticeable increase in works aimed at reducing the total thickness and the weight of the panels. High and ultra-high-strength concrete enables the production of light and thin concrete sandwich panels while providing incredible strength and durability Kandil et al. (2020); Refaie et al. (2020); Lameiras et al. (2021); Skadiņš et al. (2023). At the same time, their higher cement content increases carbon emissions, and their widespread applications have been limited by their high cost and specialized production requirements. Using lightweight concrete in PCSPs minimizes the total weight of the panel and facilitates handling and installation. It has good thermal and structural properties, making it a suitable alternative to ordinary concrete to produce sustainable sandwich panels with a high degree of composite action Wahyuni et al. (2012); Mohamad et al. (2016); Lakshmikandhan et al. (2017).

Sandwich panels have been used in low to medium-rise structures as the primary outer shell, inner partitioning walls, and floor and roofing systems. During the service life of the structure, the floor panels are subjected to lateral loads that are introduced in plane shear forces, bending moments, and out-of-plane shear forces. Shear connectors are important for the sandwich panels' performance since they enable the transfer of interfacial shear stresses between their layers, resulting in composite action. Sandwich panel layers can function as non-composite, partially composite, or fully composite, depending on the degree of interaction. Shear connectors kinds and configurations (number, spacing, and distribution) must be designed to sustain in-plane shear loads and provide an appropriate degree of composite action De and Lameiras (2015).

The development of sustainable construction techniques and the need for structural members that can respond to the changing functional requirements have highlighted the significance of the structural system, which provides opportunities for the reuse of resources or materials and encourages the principles of economic sustainability. Demountable connectors that employ mechanical fastening systems, such as bolts and headed studs, enable the disassembling of the structural system while maintaining the integrity of their components He et al. (2022). Recent advances in demountable connectors, which are used widely in composite construction, may revolutionize the production of sustainable sandwich panels. Alfeehan and Sheer (2018) used steel stud connectors to connect the layers of concrete sandwich panels and produce an assembled system. The connecting method reduced the drawbacks of the traditional method used with embedded connectors that related to the casting, connector fixing, and providing an adequate degree of composite action between the parts of the sandwich panel, in addition to the thickness control of the insulating and outer layer. Other types of shear connectors, such as steel bolts, can be used with the same method to achieve the best possible efficiency for the sandwich panel. The steel bolts allow for simple deconstruction and structural change, making them more sustainable and recyclable than typical headed stud connectors. Fang et al. (2021); Wang et al. (2021); Luo et al. (2022; Zhang et al. (2022). Contributions to research on sandwich panels using steel bolts are scarce.

Push-out tests have become the main experimental methodology for determining the ultimate capacity and load slip behaviour of shear connectors in composite systems and sandwich panels. Their primary importance comes from the ability to provide the essential data for structural analysis and design, including the ultimate capacity, shear stiffness, and failure mode characteristics Kozma et al.(2019); Luo et al.(2022). Typically, the push-out approach requires applying direct shear forces to the connector system within a standardized specimen configuration as defined by international standards. The tests provide many extremely important functions for demountable connectors, such as validation of the mechanical performance of novel connectors, establishing the design parameters in engineering applications, and proving the suitability of the connectors for assembly and disassembly repetitions.

To verify the compatibility of using the bolted demountable connectors with Precast Lightweight Concrete Sandwich Slabs (PLCSSs) in practical applications, further information must be provided about their performance and operational efficiency. To address this, three types of bolted shear connectors (I-Connector (with two bolts) as two-way shear connectors, V and X-Connectors (with three and four bolts, respectively) as one-way shear connectors) were suggested to be used as demountable connectors in PLCSSs. The suggested connectors consist of two parts, the first one is the connector with internal threads, and the second part is a bolt or a number of bolts that are compatible with the first part. The bolted connectors were presented to simulate the shear behaviour of the lightweight concrete sandwich panel using a push-out test. The size and arrangement of the push-out specimens were selected to be indicative of the connectors in the previously suggested sandwich panel by Al-Kerwei et al. (2025).

2 MATERIALS AND METHODS

Typically, small-scale specimens are used to facilitate experimental programs and specimen testing. In this study, the concrete layer thickness and shear connector depth used corresponded to the actual dimensions of specimens used in sandwich panel applications. In terms of length and width, the specimens tested represent typical sections cut from the entire sandwich slab. The work was carried out at the structural materials laboratories in the College of Engineering, Mustansiriyah University, Baghdad, Iraq. Nine specimens were divided into three groups, and each group had three identical specimens, as in the previous studies Liu et al. (2022); Sevil Yaman and Lucier (2023).Table 1 summarizes the groups. The specimen's designations SPIC, SPVC, and SPXC refer to the Sandwich Panel with I-Connector, Sandwich Panel with V-Connector, and Sandwich Panel with X-Connector, respectively.

Table 1 Parameters of Push Out Specimens.

Group	Specimens	Type of Connectors	Total Number of Bolts Per Connector
G1	SPIC1	I-Connector	2
	SPIC2		
	SPIC3		
G2	SPXC1	X-Connector	3
	SPXC2		
	SPXC3		
G3	SPVC1	V-Connector	4
	SPVC2		
	SPVC3		

2.1 materials

Nine specimens of PLCSS reinforced with steel welded layers were cast for push-out testing. The lightweight concrete adopted in this study was proposed by Abdulkareem and Alfeehan (2018) with the mix proportion, as shown in Table 2. Concrete cylinders with dimensions (150×300mm) were prepared to test the compressive strength, elastic modulus, and splitting tensile strength according to ASTM C39/C39M-21 (2021), Designation: C469/C469M – 22 (2022), and Designation: C496/C496M – 17 (2017), respectively. The compressive strength, density, elastic modulus, splitting tensile strength, and Poisson ratio results were 25MPa with a 3.3% coefficient of variation, 1790 kg/m^3, 22.84 GPa, 2.39 MPa with 9.6% coefficient of variation, and 0.22, respectively. Steel welded layers with a grid size of 50×50mm and a diameter of 5 mm were used for reinforcing the lightweight concrete specimens. The I-Connectors were made from steel tubes with an outer diameter of 25 mm and an inner diameter of 10 mm. The X and V-Connectors were made from steel plates, which are commercially available in Iraq, with a thickness of 7 mm and shaped by plasma technology. To connect the connector with the concrete layers, two bolts must be used with I-Connectors, three with V-Connector, and four with X-Connector. A washer with a diameter of 50 mm was used to install the bolt when connecting the layers with each other. Steel welded layers and shear connectors are shown in Figure 1. The tensile stress-strain behaviour of steel reinforcement, bolts, and plate was measured using direct tensile tests according to Designation: A1064/A1064M - 22 (2022), Designation: F593 - 22 (2022) and ASTM E8-E8M-24(2024). Table 3 summarizes the elastic modulus, yielding stress, and ultimate strength results for the average of three samples.

Table 2 Mix Proportion of Lightweight concrete(Abdulkareem and Alfeehan (2018)

Material	Quantity
Portland Cement Type I	800 kg/m^3
Sand (passing through a 600-micron sieve)	800 kg/m^3
Silica Fume (0.2 micron) (8%) of Cement wt.	64 kg/m^3
Limestone (95% pass through sieve 138µmm)	320 kg/m^3
w/c	33%
Superplasticizer (1.065 kg/liter) (2%) of Cementitious Materials	16.22 L
Aluminum Powder (0.003 of cement wt.)	2.4 kg

Table 3 Geometric and Material Properties of Tube and Plate Used in Connectors

Type of Element	D or t (mm)	E (GPa)	f_y (MPa)	f_u (MPa)
Steel Bolt	10	209	184.1	514
Steel Wire	5	208	414.1	503.77
Steel plate	7	210	416.7	530.33

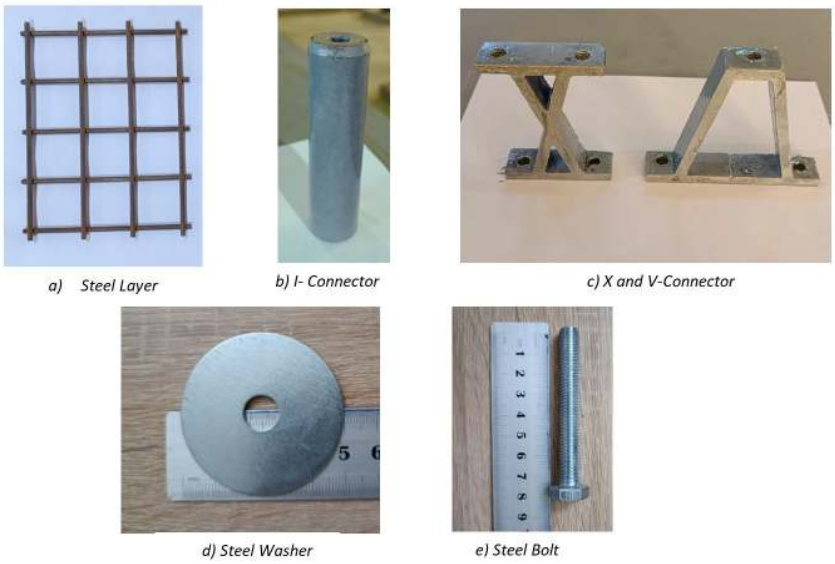

Figure 1 Steel layer mesh, shear connectors, steel washer, and bolt.

2.2 specimens' description

A double shear test, which emulates the behaviour of the suggested shear connectors in lightweight concrete slab panels, was implemented to evaluate their shear behaviour. A similar approach has been used in other recent studies that investigated the performance of shear connectors for sandwich panels with and without some degree of lateral restraint Egbon and Tomlinson (2021); Lou et al. (2022). Double-shear specimens were designed to represent two sandwich slab panel cross-sections back-to-back with a 40mm concrete external layer and a 100mm internal layer without insulation, so the shear connectors can be loaded directly in shear without the contribution of the insulation layer.

The proposed new types of connectors were manufactured from locally available steel plates and shafts using automated CNC plasma technology. Threaded holes were drilled in the steel connectors with specific diameters and locations in preparation for fastening to the concrete layers using bolts, nuts, and washers. The connectors are oriented such that the shear forces act parallel to the connector's length along the concrete panel's length. The details of the shear connector are presented in Figure 2. Test dimensions of the specimen are 250 mm in length, 200 mm in width, and 360 mm in depth, with two connectors placed in each specimen, as shown in Figure 4.

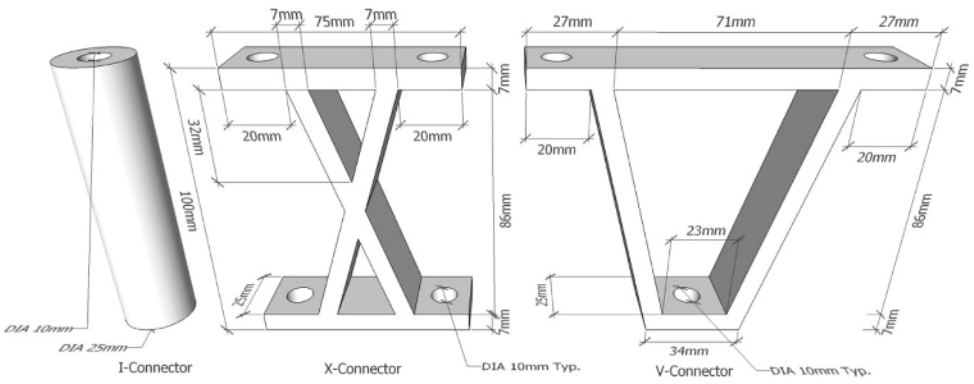

Figure 2 Shear connectors details.

2.3 Casting of PLCSS specimens

Two types of wood mold of dimensions 200×250×80mm and 200×250×40mm with four movable sides fixed to the base by screws were used for casting the concrete specimens in a horizontal position. Steel short studs with a diameter equal to 8mm were fixed at the base of the mold to create the hole through the thickness of each specimen, as shown in Figure 3 (b). Each steel stud was encased by a plastic tube with an outer diameter equal to the diameter of the hole required to be made in the concrete layer. The plastic tube also works to prevent the concrete from adhering to the steel stud. The position of the steel mesh in the middle of the thickness of the concrete layers was maintained consistently. The concrete layers were poured with depths of 40mm and 80mm to form the exterior and interior layers of each specimen and cured in a moist condition for 28 days. After that, the concrete layers were assembled using the bolted demountable shear connectors. The fabrication processes of the push-out specimens are illustrated in Figure 3.



Figure 3 The fabrication process of PLCSS.

2.4 Test setup and instrumentation details

The shear performance of shear connectors in sandwich panels was investigated by employing various test techniques such as push-out and direct shear tests. Typical push-out specimens were used in this study, like many related studies Sevil Yaman and Lucier (2023); Tawil et al. (2024). The push-out test was carried out using an electronic hydraulic universal loading machine with a capacity of 100 kN. The middle concrete layer was pushed down during the test relative to the exterior layer. The applied load and the relative deflection between the interior and exterior layers were wired to an electronic data acquisition system.

To provide an alternative load path to the compression and tension forces that are generated by internal eccentricity, and to prevent excessive layer rotation, a supporting steel frame was manufactured in a way that does not cause any rotation of concrete layers about the direction of the applied load. As a result, only shear force was transmitted through the connector to the concrete interface when the load was applied to the specimens. Each specimen was loaded to failure under a monotonically increasing load, which was used to simulate the conditions resulting in shear connectors in sandwich panels subjected to flexural load. A thick steel plate and load cell were set on top of the internal layer of the specimens so that the load could be applied uniformly during the test. The deflection of the outer layer was evaluated in the vertical direction using two Linear Variable Differential Transformers (LVDTs). Each LVDT was mounted on each exterior layer on the front of the specimen. An aluminum angle is fixed at the interior concrete layer as a reference point of displacement. The final LVDT readings were average values from the LVDTs. The details of the test instruments and the steel frame are presented in Figure 4.

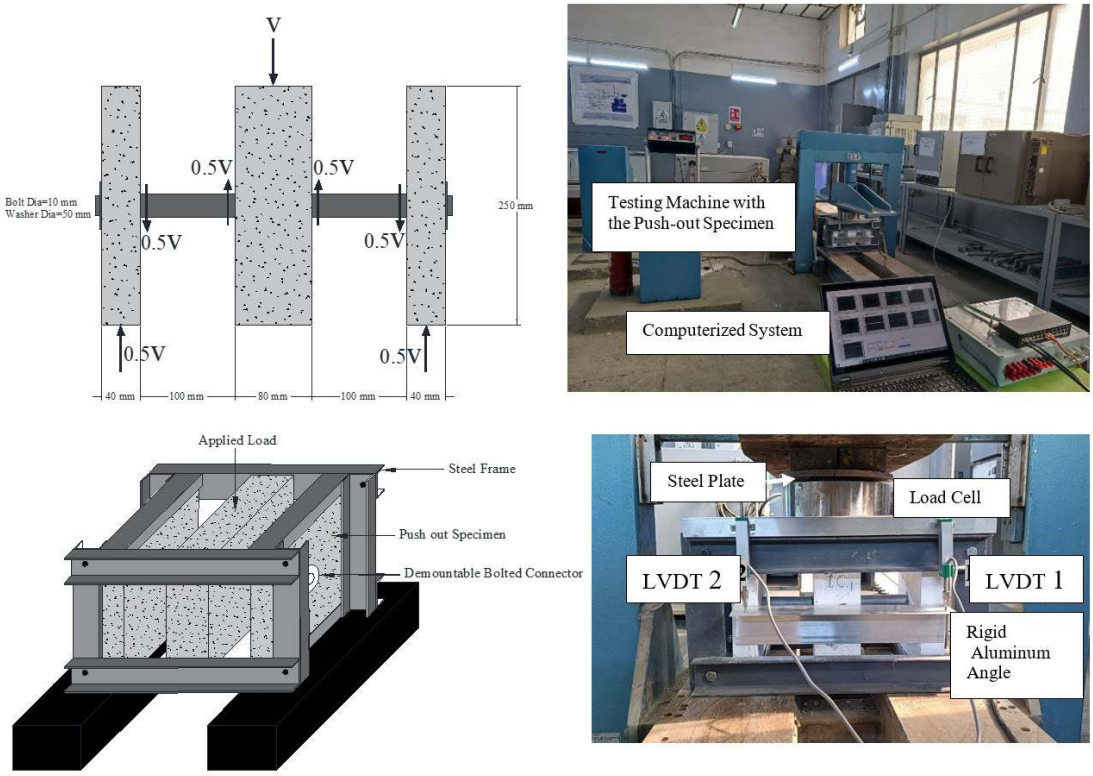

Figure 4 Specimen dimensions and test instruments.

3 RESULTS AND DISCUSSION

Push-out test is a defined experimental method used to assess the shear performance of the sandwich panel specimens by exposing them to direct shear forces in such a way that a relative slip is produced between their layers. The test produces critical data for the key performance features involving shear and slip capacity, stiffness, ductility, and the general load slip behaviour of the system. To achieve this, nine specimens of PLCSS were fabricated and tested and distributed into three groups. Each group included three identical specimens for each type of shear connector. The performance of the three types of steel connectors (I, X, and V) is discussed in terms of analyzing the load-slip profiles and failure modes. The results are analyzed in terms of approximate yield load, ultimate load, deformability index, stiffness, ductility, and energy absorbed. In all tests, the peak load is the highest applied load on the specimen recorded by the load cell. The results, with their average values for each group Goudarzi et al. (2016); Jiang et al. (2018); Egbon and Tomlinson (2021)are determined and illustrated in Table 4.

3.1 Load- slip curve

The load slip behaviour of sandwich panels is a significant factor in evaluating the behaviour of the connector during the test. It reflects the connector's capability to permit the relative slip between the layers of the sandwich panel before failure.

This has an important effect on their safety, durability, and serviceability. Figure 5 represents the load slip behaviour of the three groups, where the load is the total load applied on the inner layer, and slip refers to the relative displacement between the inner and outer layer. Slip increased with increasing load until the specimen reached the ultimate load, and afterwards, the load decreased systematically until failure. It appears that even after the cracking and crushing of concrete in front of the connector, the bolt's tensile strength continued to provide shear resistance at large slips.

The characteristic responses of the three types of connectors are presented in Figure 5 (d) and determined by averaging the force values at each displacement level for each group of specimens. Therefore, the peak loads of the characteristic curves are less than the values reported in Table 4. The general load slip response of the average of the three specimens can be divided into three phases; it starts with a linear phase with relatively high shear stiffness, lower stiffness after the load exceeds the proportional limit, and sudden or gradual drops when the load reaches the peak point. The proportional limit in the push-out test refers to the highest value of shear force at which the relationship between the load and slip remains linear.

Bolts connect each connector to the concrete layers, and the layers are restrained against rotation. So, the ends of each connector become restricted against the out of plane rotation. Transferring shear forces causes the generation of the bending moments at the ends of the connector, as shown in Figure 6. Thus, the high tensile forces tend to pull the ends of the connector out of the concrete layer. The connection force provided by the bolts' tensile strength prevents the separation of the concrete layer and the connector. The combined loads can lead to an underestimation of the shear capacity in the push-out test compared to the actual PLCSS under flexural or real load. The shape of X-Connectors and the presence of a larger number of bolts compared with I and V-Connectors, make them the most rigid in withstanding the moment, as each bolt is subject to half the amount of moment in the case of the I-Connectors.

As the loading increases and the tensile stresses in the concrete reach maximum values, the concrete begins to crack and fracture, causing a sudden decrease in strength that appears clearly in the load slip relationship. At that time, the bolt is the one that resists the loading stress alone.

This drop is more significant in the I-Connector due to one bolt at each end instead of two bolts in the others. Therefore, the increase in bolt diameter, number of bolts, and connector strength, in conjunction with the higher strength of concrete, will improve the transfer of forces and bending moments, accompanied by an increase in the ultimate strength of the specimen.

The peak and proportional limit loads in SPXC increase by about 284.5% and 743.5%, respectively, compared to the least one SPIC; meanwhile, in the same comparison, these loads in SPVC increase by about 195.72% and 513.88% respectively. These increases are related to the number of bolts in the connectors and the method of shear transfer from the exterior to the interior layer. In SPIC, the shear force was transferred by one bolt from the exterior to the interior layer, and this caused a yielding of the bolt and more significant displacement before failure.

The average slip in the three types of connectors exceeded the value of 6mm, so they were classified as ductile connectors, as recommended in .Eurocode 4(2004)

Table 4 Summary of test results

Spec. ID	Proportional Limit				Peak Load				Deformability Index (DI)	Failure Mode
	Load (kN)	Mean (kN)	Slip (mm)	Mean (mm)	Load (kN)	Mean (kN)	Slip (mm)	Mean (mm)		
SPIC	2.56	2.68±0.56	2.6	2.61∓0.43	9.4	10.36∓0.66	31.5	31.4∓1.02	51.03	Splitting
	2.058		2.1		10.9		30.1			Splitting
	3.418		3.15		10.76		32.6			Splitting
SPVC	17.5	16.45±0.8	3.4	3.27∓0.128	28.5	29.46∓1.01	12	12.16∓0.62	6.7	Pry-out
	15.8		3.1		28.87		13			Pry-out
	15.9		3.33		31		11.5			Pry-out
SPXC	20.9	22.6±1.17	2	2.2∓0.22	37.6	38.4∓0.77	12	12.35∓0.96	9.62	Pry-out
	23.1		2.1		39.5		11.4			Pry-out
	23.7		2.5		38.1		13.67			Pry-out

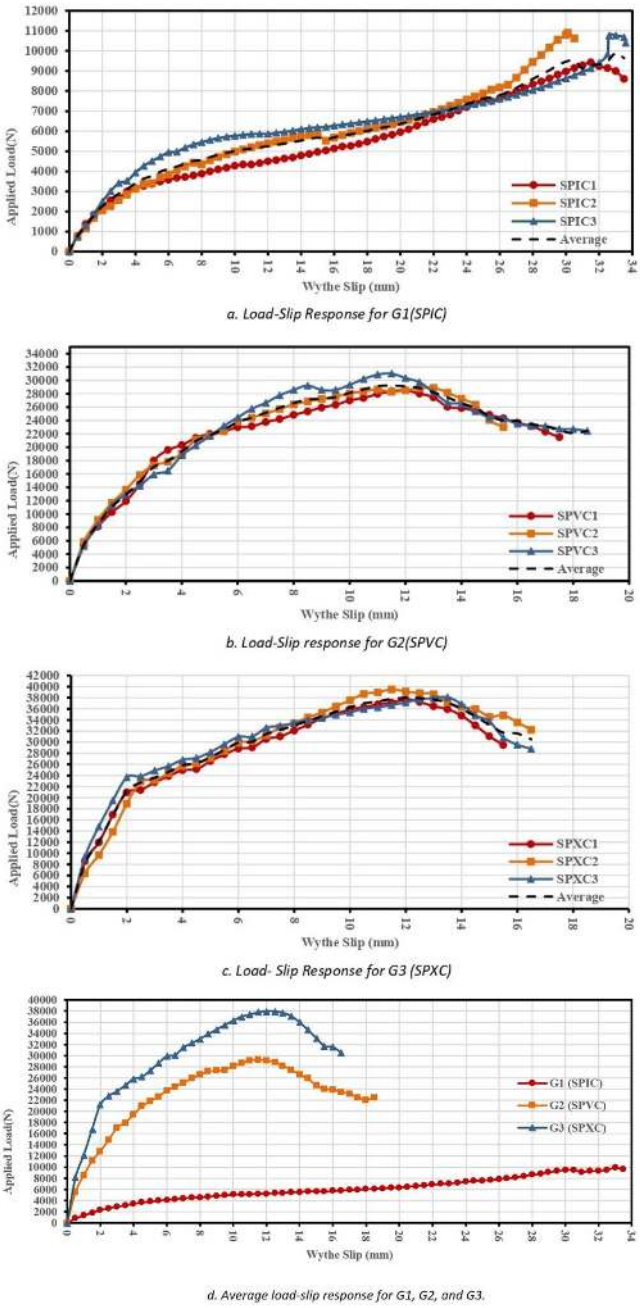

Figure 5 Load-Slip response.

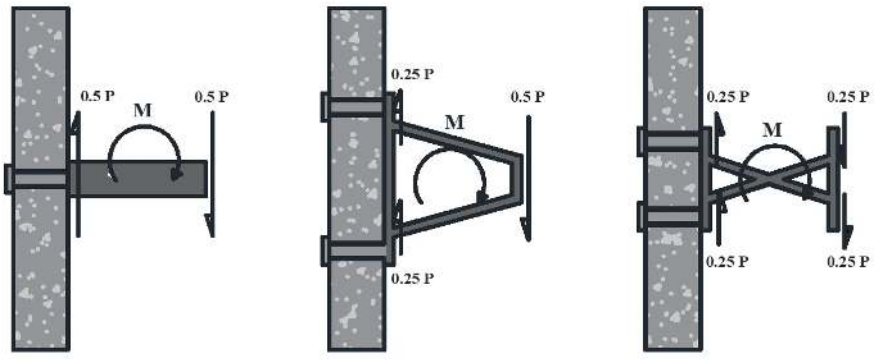

Figure 6 Combined shear and moment in the push out test.

3.2 Deformability index (DI)

The Deformability Index (DI) is essential for guaranteeing that the demountable connectors offer balanced performance through the combination of shear resistance, ductility, and reusability. DI determines the ductility and energy absorption capacity of the shear connectors under the shear load. It is used to evaluate the structural element's ability to deform before failure. The high value of DI demonstrates the resilience of connectors to repeated loads without permanent damage. Connectors with a higher value of DI are preferred to be used in seismic areas due to their ability to redistribute loads during the earthquake (DI>4).DI was determined using the equation (1) Egbon and Tomlinson (2021), as listed in Table 4 and Figure 7. Since the SP specimens are not subjected to bending, other methods (e.g., curvature approaches) are not used here.

$$DI=\frac{P_u\Delta_u}{P_E\Delta_E} \quad (1)$$

SPIC specimens had larger DI, mainly attributed to their lesser deformations at the proportional limit, and the highest value at peak load relative to the SPVC and SPXC specimens. This behaviour indicates that specimens SPIC show a more pronounced non-linear response.

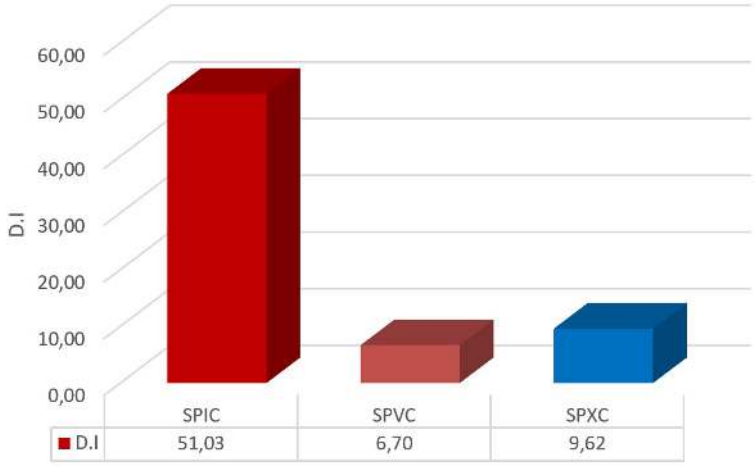

Figure 7 Deformability of G1, G2, G3 specimens.

3.3 Failure modes

Studying the failure modes is very important for developing design guidelines and guaranteeing the reliable performance of the demountable connectors in the PLCSS. So, the type of failure (shear in bolt, bolt yielding, crushing of concrete) must be observed and documented as data for these purposes. The most common failure mode in the push-out test can be classified into two main categories: connector-related failures and concrete-related failures, which are influenced primarily by the connector's design and the concrete's properties. The maximum shear capacity of push-out specimens is achieved when a failure occurs in the bolt or connectors rather than the concrete. In the study, the failures in all the specimens occurred in concrete due to using lightweight concrete with moderate compressive strength. Therefore, the shear capacity of the lightweight concrete sandwich panels can be enhanced by forcing failure to occur in the steel connectors through the use of concrete with high compressive strength.

Theoretically, according to Eurocode 3(2005), Shear resistance per shear plane can be calculated from the following equation:

$$\mathrm{F_{v,Rd}} = \frac{\alpha_v\, f_{ub}\, A}{\gamma_{M2}} = 19.24\ \mathrm{kN\ (per\ bolt)} \quad (2)$$

Where:
α_v =0.6 (for a typical bolt).
f_{ub} ultimate tensile strength of the bolt=514 MPa.
A stress area of the bolt =78mm^2
γ_{M2} partial safety factor of bolt=1.25.

For the three types of connectors, $F_{v,Rd}$> applied shear force per bolt (5.18 kN per bolt in I-Connector,14.72 kN per interior bolt in V-Connector, and 9.6 kN per bolt in X-Connector), Connector failure did not happen as the maximum applied shear force is lower than the ultimate strength of the bolt and the connector.

The concrete failure modes of all specimens are shown in Figure 8. Two different failure modes of concrete were observed in the push-out test. The primary failure mode observed in the specimens SPIC was net tension (splitting) failure of concrete, which took the form of cracks initiating from the connector and propagating towards the layer edges. In most cases, the cracks were horizontal, and in some instances, they were oblique at an angle. Net tension (splitting) is common in lightweight concrete when the concrete tensile strength is less than the applied tensile stresses, and in cases of insufficient edge and member thickness and connector spacing Eurocode 2(2018).

At the beginning of loading, the load increased with small slip values between the inner and outer layers of specimens. After the yield point, the shear force in the bolts turns into a tensile force, causing a high tensile stress to appear around the bolt hole, which increases with increasing load, reaching a value that exceeds the tensile strength of the concrete. Cracks initiate at these points of high stress concentration and decay rapidly away from the bolt hole.

Pry-out failure is the primary failure mode for SPVC and SPXC specimens, as shown in Figures 8b and 8c. There was a noticeable spalling around the bolt due to its rotating around the layer. This type of failure occurs when the bolt is subjected to a transverse force that pushes it out of the concrete instead of pulling it directly along its axis. Zhao (1995) analyzed the load-bearing mechanism of shear-loaded headed stud anchors that failed in a pry-out mode, like the failure mechanisms of SPVC and SPXC specimens. These mechanisms are shown in Figure 9; as the shear force increases, the crushed surface that contacts the connector causes the centroid of resistance to move away. Rotating the connector causes an increase in the eccentricity between the applied load and resistance. In the contact area between the concrete and the connector, the eccentricity of the load provides a couple of forces, one of which is a compressive force that forcefully crushes the concrete on one side of the layer and a tensile force that pulls the bolt head on the other side. When a bolt's tensile force exceeds its maximum fracture surface, a conical fracture surface forms behind the connector.

Eurocode 2(2018) provides validated equations for the different failure modes of concrete, with explicit equations when using the bolted or demountable connectors as shown below:

For SPIC specimens where the splitting failure is the primary one, this type of failure may occur due to insufficient edge distance or the thickness of the member, in addition to the compressive strength; the following two conditions must be checked:

Check the edge distance (c) with the critical edge distance for splitting ($c_{cr,sp}$):

100 >(1.5 h_{ef}=60mm)→ OK.

Check specimen thickness (h) with the minimum thickness(h_{min}):

40<(2 h_{ef}=80mm) → not OK, the splitting failure may occur due to the insufficient thickness.

The concrete splitting resistance of concrete ($N_{Rk,sp}$), must be checked with the applied shear force (N_{Ed}):

$N_{Rk,sp}$ can be calculated from Eqs(3-8):

For headed and post-installed fasteners:

$$N_{Rk,sp} = N^{0}_{Rk,c} \frac{A_{c,N}}{A^{0}_{c,N}} \psi_{s,N} \psi_{re,N} \psi_{ec,N} \psi_{h,sp} \tag{3}$$

Where:

$$N^{0}_{Rk,c} = k_1 \sqrt{f_{ck}}\, h_{ef}^{1.5} \tag{4}$$

$k_1 = 11$ (for post-installed fasteners).
f_{ck} compressive cylinder strength of concrete=25 MPa.
h_{ef} effective embedment depth=40 mm.
$A^{0}_{c,N}$ reference projected area $3h_{ef} \times 3h_{ef} = 14400 mm^2$.
$A_{c,N}$ actual projected area= 14400 mm^2

$$\psi_{s,N} \text{ edge effect factor} = 0.7 + 0.3 \frac{c}{C_{cr,N}} \leq 1 \tag{5}$$

c the smallest distance edge=100 mm
$C_{cr,N}$=1.5h_{ef}=60 mm.

$\psi_{s,N}$=1

$$\psi_{re,N} \text{ shell spalling factor} = 0.5 + \frac{h_{ef}}{200} \leq 1 \quad (6)$$

$\psi_{re,N}$= 0.7.

$$\psi_{ec,N} \text{ eccentricity factor} = \frac{1}{1+2(\frac{e_N}{S_{cr,N}})} \leq 1 \quad (7)$$

e_N eccentricity of the resultant tension force to the fastener's centre of gravity =0 for I-Connectors.

$S_{cr,N}$= $3h_{ef}$

$\psi_{ec,N} = 1$

$$\psi_{h,sp} \text{ member thickness factor} = (\frac{h}{h_{min}})^{2/3} \leq \max\left(1.5, \frac{h}{h_{min}}\right) \quad (8)$$

h_{min}=2h_{ef}=80mm.

$\psi_{h,sp}$=0.63

from above $N_{Rk,Sp}$=6.14 kN≈the applied shear

In SPVC and SPXC specimens, the concrete pry-out failure occurs when the applied shear force (V_{Ed})> characteristic resistance of concrete pry-out failure under shear force ($V_{Rk,cp}$), which can be calculated from the following:

For headed and post-installed fastener

$$V_{Rk,cp} = k_8 . N_{Rk,c} \quad (9)$$

Where:

k_8=1

$$N_{Rk,cp} = N^0_{Rk,c} \frac{A_{c,N}}{A^0_{c,N}} \psi_{s,N} \psi_{re,N} \psi_{ec,N} \psi_{M,N} \quad (10)$$

Where:

$A^0_{c,N}$ reference projected area $6h_{ef} \times 3h_{ef} = 28800 mm^2$.

$A_{c,N}$ actual projected area= 27000 mm^2 for V-Connectors, 21000 mm^2 for X-Connectors.

C the smallest distance edge=72.5 mm for V-Connectors, 97.5 mm for X-Connectors.

$\psi_{s,N}$=1 for V, and X-Connectors

$\psi_{re,N}$= 0.7 for V, and X-Connectors

e_N = 52.5 mm for V-Connectors, and 27.5 mm for X-Connectors.

$\psi_{ec,N} = 0.53$ for V-Connectors and 0.68 for X-Connectors.

$\psi_{M,N}$=1

For SPVC specimens,

from above $N_{Rk,cp}$=4.84 kN< the applied shear

For SPXC specimens ,

from above $N_{Rk,cp}$=4.83 kN< the applied shear

The main reasons for this type of failure are insufficient compressive strength, a small edge distance due to the specimen's small dimensions, and a small thickness value.



Figure 8 Failure of specimens.

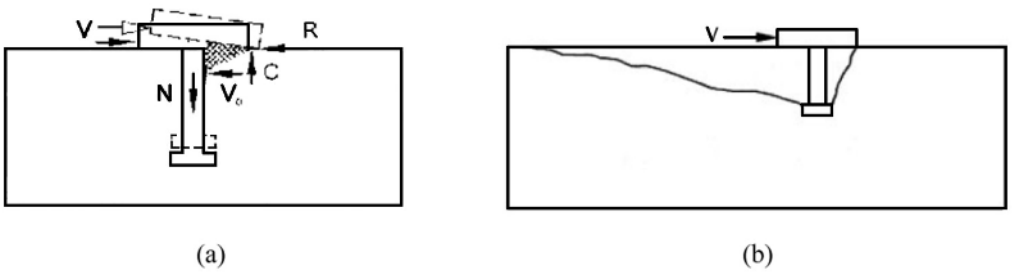

Figure 9 (a) Load bearing mechanism of headed stud anchorage (b) crack development.Zhao (1995)

3.4 Shear stiffness (K)

Shear stiffness is an indicator of the efficiency of transferring load between the steel connectors and concrete layers. The shear stiffness of the proposed connectors should be determined to estimate the out-of-plane deflections of PLCSS under the service loads and then compared with the deflection limits required by the design codes and standards. Bolted connectors show a lower initial stiffness in comparison with welded ones as a result of some allowance for slip Yu et al. (2023).

Table 4 shows the experimental average values of the elastic and inelastic shear stiffnesses and the coefficient of variation calculated using Equations (11) and (12)Egbon and Tomlinson (2021).

$$K_E = \frac{P_E}{\Delta_E} \tag{11}$$

$$K_{IE} = \frac{P_u - P_E}{\Delta_u - \Delta_E} \tag{12}$$

The elastic stiffness increased by 3.94 and 9.15 times when V and X-Connectors were used in comparison with the I-Connector. The value of elastic stiffness of SPXC specimens was the highest, and then there was a more significant decrease in stiffness than SPVC specimens. Higher stiffness value reduces the slip between the layers of sandwich panels and then enhances the composite action and serviceability. The low value of SPIC specimens' stiffness makes them attract less load. Loss of stiffness occurred in all of the specimens after the proportional limit. The decrease in stiffness is related to the cracking of concrete. Later, closer to failure, damage is caused by connector nonlinearity and concrete splitting or crushing. The stiffness loss was more gradual in SPVC and SPXC specimens than SPIC because the connectors remain active in their tests. After the push-out test, the connectors and the bolts are removed and observed to have some yielding when using I-Connectors.

3.5 Energy absorption

It refers to the ability of the structure or its components to absorb and dissipate energy resulting from the influence of external forces such as seismic forces, wind loads, and other dynamic effects. A high energy absorption value reduces the effect of sudden loads by plastic deformation. Energy absorption can be estimated from the calculation of the area under the load-slip curve. From the calculated results of energy absorbed shown in Table 4, and Figure 10, the SPXC specimens have the highest value, which is related to the behaviour of these specimens before reaching the proportional limit.

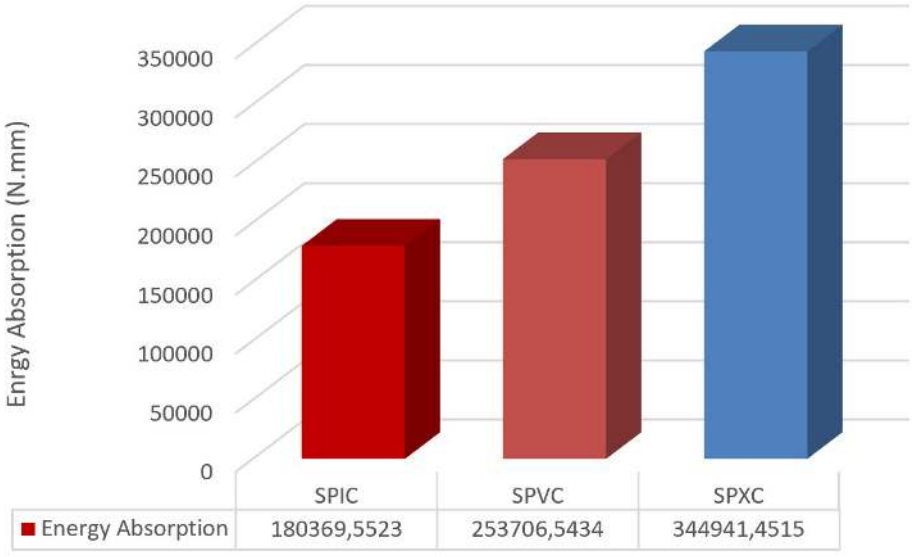

Figure 10 Energy absorption of G1, G2, and G3 specimens.

5 Estimation of the uniform load capacity of PLCSS

The uniform load capacity of supported lightweight concrete sandwich slabs with demountable connectors, PLCSSs, can be estimated from the average shear strength of each group. Below is a structured method aligned with the beam theory and experimental methodologies to achieve that.

For a simply supported beam subjected to a uniform load:

Design Shear capacity per connector

$$\mathrm{P_{d/c}} = \frac{\mathrm{Pu}}{\mathrm{N \times S.F}} \tag{13}$$

From beam theory, under bending, the horizontal shear force per unit length in the sandwich slab can be calculated from the following equation:

$$\mathrm{q} = \frac{\mathrm{V_{max} \times Q}}{\mathrm{I}} \tag{14}$$

The total shear capacity of the connector per unit length must satisfy the following:

$$\mathrm{q} \leq \frac{\mathrm{n \times P_{d/c}}}{\mathrm{s}} \tag{15}$$

From equations (14) and (15):

$$\mathrm{V_{max}} = \frac{\mathrm{n \times P_{d/c} \times I}}{\mathrm{s \times Q}} \tag{16}$$

For simply supported sandwich slab:

$$\mathrm{w_{max}} = \frac{2 \times \mathrm{V_{max}}}{\mathrm{L}} \tag{17}$$

Substitute Vmax from equation(16):

$$\mathrm{w_{max}} = \frac{2 \times \mathrm{n \times P_{d/c} \times I}}{\mathrm{s \times Q \times L}} \tag{18}$$

Substitute the values of Q and I in eq (18):

$$\mathrm{w_{max}} = \frac{4 \times \mathrm{n \times P_{d/c}} \times (0.083 \times \mathrm{b} \times t^3 + \frac{Q^2}{A})}{\mathrm{s \times Q \times L}} \tag{19}$$

Where:

Pu ultimate load from the push-out test (kN)

N number of connectors in the push-out specimen

S.F safety factor=1.25 (according to EN1992-4)

V max shear force in the simply supported slab subjected to uniform load (kN).

L length of slab (m)

Q first moment of one layer about the neutral axis (m^3)=A×y

A area of one layer in the sandwich slab(m^2)

y distance from the center of the sandwich panel layer to the neutral axis (m).

I moment of inertia of the sandwich slab cross section (m^4).

n number of connectors along the width of the sandwich slab.

s longitudinal spacing between connectors (m).

W_{max} uniform load (kN/m).

Equation (19) combines the performance of the shear connectors with geometric properties for estimating the uniform load capacity of PLCSSs. To study the applicability of the suggested demountable connectors to be used in the PLCSS as a floor in the building, the span length and longitudinal spacing in Equation (19) were varied to determine the uniform load capacity. Figure 11 shows the estimated uniform load capacity for a sandwich panel made of lightweight concrete with a thickness of 40 mm per layer and the properties described previously in this study, with a length ranging from 2-5 m, spacing from 0.15-0.25 m, and different types of demountable bolted shear connectors of 100 mm height. The maximum uniform load estimated from push-out may be smaller than the actual value in sandwich panels due to the condition associated with the small dimensions of the push-out test specimen. Since the uniform load capacity is higher than the live load for most building applications according to ASCE-7-16 and Eurocode 1, sandwich slabs with demountable connectors can have enough strength for use in roof or floor applications.

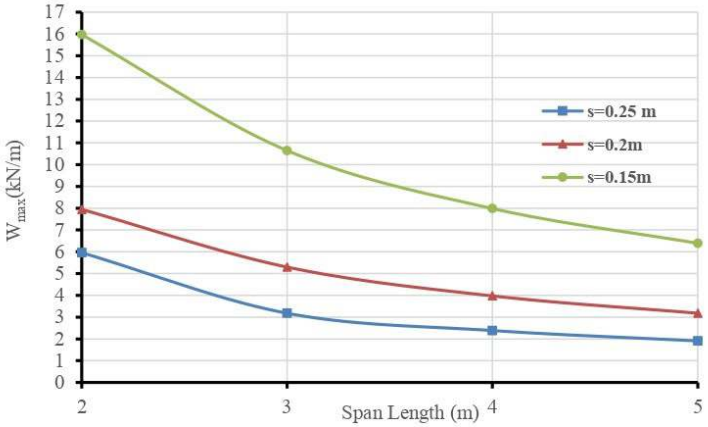

a. PLCSS with I-Connectors

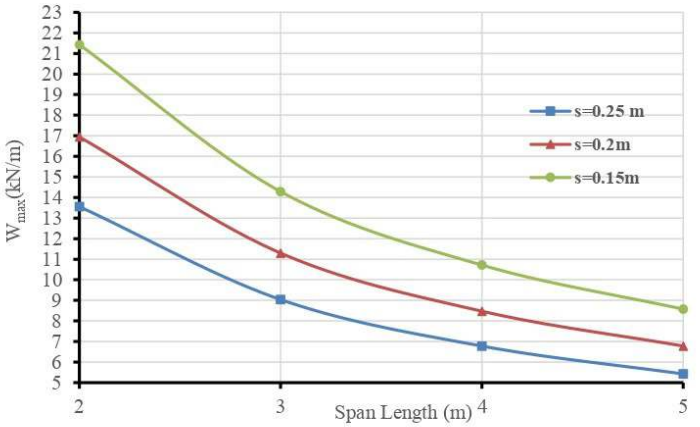

b. PLCSS with V-Connectors

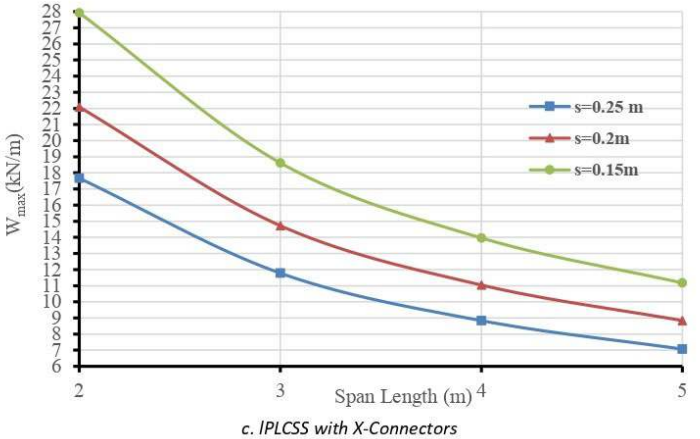

c. IPLCSS with X-Connectors

Figure 11 Estimated ultimate load capacity of various span lengths and longitudinal spacing of PLCSSs with demountable connectors, depending on the push-out test results

5 CONCLUSION

Three types of demountable bolted steel connectors were suggested for use in concrete sandwich panels. The shear behaviour of the connectors in PLCSS was evaluated using push-out tests. The effect of the type of connector with the number of bolts was investigated on the specimen's ultimate shear capacity, deformability index, mode of failure, shear stiffness, and energy absorption. The following conclusions can be drawn:

1. The study results have verified the capability of the demountable bolted steel connectors to achieve the required connection between the layers of PLCSSs and promote sustainable principles at the same time. They are characterized by withstanding high values of uniform load, ease of installation, and the possibility of obtaining lightweight panels by using them with lightweight structural concrete.
2. The three types of connectors achieved an average characteristic slip of more than 6 mm, which makes them ductile connectors according to Eurocode 4.
3. Compared to SPVC and SPIC specimens, the peak load or shear capacities of SPXC specimens were the highest. These connectors can be used in long-span sandwich slabs and sustain heavy uniform loads.
4. SPIC specimens show the lowest load capacity and stiffness values, with the highest ductility and deformability index values. However, the shear load capacity and stiffness of these specimens are accepted in the designs of lightweight concrete sandwich slabs with demountable connectors, especially those used in small to moderate-span or lightly loaded applications.
5. The failures in all the specimens occurred in concrete due to using lightweight concrete with moderate compressive strength. Therefore, the shear capacity of the lightweight concrete sandwich panels can be enhanced by forcing failure to occur in the steel connectors through the use of concrete with high compressive strength.
6. The highest stiffness values are observed in SPXC specimens. The total number of bolts in each connector significantly impacts maintaining close elastic and inelastic stiffness.
7. Increasing the bolt's diameter or yield strength, together with using higher-strength concrete, will force the failure to be in the connectors and lead to larger stiffness and load capacity. Also, reducing the spacing between connectors will increase the load sharing between them, making them more suitable for larger spans and sustaining higher loads.

The present push-out tests consider the shear performance of a new system of demountable connectors that will be used later in sandwich panels. The study recommends investigating the long-term behaviour of sandwich panels regarding the degree of composition action. To optimize both strength and ductility behaviour while preserving the advantages of demountability in the sustainable building sector, future studies should focus on developing predictive models that can account for the connectors' demountable features and the unique properties of lightweight concrete.

Acknowledgment

The authors would like to thank University Kebangsaan Malaysia (UKM), Malaysia, Mustansiriyah University, Iraq (www.uomustansiriyah.edu.iq), Baghdad University, Iraq, and Al-Turath University, Iraq, for their support of this work.

Author contribuitions: Conceptualization, Methodology, Data curation and Visualization, Investigation and Writing – original draft, Rana H. Alkerwei; Supervision and Writing – review & editing, S.A. Osman, Ammar N. Hanoon, and Ahmed W. Al Zand.

Data Availability: Research data is only available upon request.

Editor: Pablo Andrés Muñoz Rojas

References

Abdulkareem, T.A. and Alfeehan, A.A. (2018) Effect of the Rib Depth to the Overall Beam Depth Ratio in the Lightweight One-Way Ribbed Slabs, International Journal of Engineering & Technology. Available at: www.sciencepubco.com/index.php/IJET.

Ade S. Wahyuni, Vanissorn Vimonsatit and Hamid Nikraz (2012) 'Shear Behaviour of Ligthweight Sandwich Reinforced Concrete Slabs', Advances in Structural Engineering, 15(10), pp. 1705–1715.

Alfeehan, A.A. and Sheer, N.M. (2018) 'Reactive Powder Concrete Sandwich Panels with Mechanical Connection Approach', in International Conference on Advances in Sustainable Engineering and Applications, ICASEA 2018 - Proceedings. Institute of Electrical and Electronics Engineers Inc., pp. 121–125. Available at: https://doi.org/10.1109/ICASEA.2018.8370968.

Al-Kerwei, R.H. et al. (2025) 'Flexural Behaviour of Precast Lightweight Concrete Sandwich Slabs With Demountable Bolted Steel Shear Connectors', Civil Engineering Journal (Iran), 11(2), pp. 488–508. Available at: https://doi.org/10.28991/CEJ-2025-011-02-06.

ASTM C39/C39M-21 (2021) 'Standard Test Method for Compressive Strength of Cylindrical Concrete Specimens', American Society for Testing and Materials [Preprint].

ASTM E8-E8M-24 (2024) 'Test Methods for Tension Testing of Metallic Materials'. West Conshohocken, PA: ASTM International. Available at: https://doi.org/10.1520/E0008_E0008M-24.

Byoung-Jun Lee and Stephen Pessiki (2007) 'Design and Analysis of Precast, Prestressed Concrete, Three - Wythe Sandwich Wall Panels', PCIJOURNAL, 52(4), pp. 70–83.

De, R. and Lameiras, M. (2015) Universidade do Minho Escola de Engenharia.

Designation: A1064/A1064M - 22 (2022) 'Standard Specification for Carbon-Steel Wire and Welded Wire Reinforcement, Plain and Deformed, for Concrete', American Society for Testing and Materials [Preprint].

Designation: C469/C469M – 22 (2022) 'Standard Test Method for Static Modulus of Elasticity and Poisson's Ratio of Concrete in Compression', American Society for Testing and Materials [Preprint].

Designation: C496/C496M – 17 (2017) 'Standard Test Method for Splitting Tensile Strength of Cylindrical Concrete Specimens', American Society for Testing and Materials [Preprint].

Designation: F593 - 22 (2022) 'Standard Specification for Stainless Steel Bolts, Hex Cap Screws, and Studs', American Society for Testing and Materials [Preprint].

Egbon, B. and Tomlinson, D. (2021) 'Experimental Investigation of Longitudinal Shear Transfer in Insulated Concrete Wall Panels with Notched Insulation', Journal of Building Engineering, 43. Available at: https://doi.org/10.1016/j.jobe.2021.103173.

Eurocode 2-Design of concrete structures Part 4: Design of fastenings for use in concrete (2018).

Eurocode 3 (2005) Design of steel structures - Part 1-8: Design of joints.

Eurocode 4 (2004) Design of composite steel and concrete structures-Part 1-1: General rules and rules for buildings.

Fang, Z. et al. (2021) 'Experimental investigation on shear behaviour of high-strength friction-grip bolt shear connectors in steel-precast UHPC composite structures subjected to static loading', Engineering Structures, 244. Available at: https://doi.org/10.1016/j.engstruct.2021.112777.

Goudarzi, N. et al. (2016) 'Characterization of The Shear Behaviour of Z-Shaped Steel Plate Connectors Used in Insulated Concrete Panels', in PCI Journal. Precast/Prestressed Concrete Institute, pp. 23–37. Available at: https://doi.org/10.15554/pcij.03012016.23.37.

He, J. et al. (2022) 'Behaviour and design of the "lockbolt" demountable shear connector for sustainable steel-concrete composite structures', Structures, 44, pp. 988–1010. Available at: https://doi.org/10.1016/j.istruc.2022.08.062.

Jiang, H. et al. (2018) 'The Shear Behaviour of Precast Concrete Sandwich Panels with W-shaped SGFRP Shear Connectors', KSCE Journal of Civil Engineering, 22(10), pp. 3961–3971. Available at: https://doi.org/10.1007/s12205-018-0809-9.

Kandil, M.A. et al. (2020) 'Effect of Changing Properties of Wythes in Precast Structural Sandwich Panels', Civil Engineering Journal (Iran), 6(9), pp. 1765–1778. Available at: https://doi.org/10.28991/cej-2020-03091581.

Kozma, A. et al. (2019) 'Push-out tests on demountable shear connectors of steel-concrete composite structures', Structures, 21, pp. 45–54. Available at: https://doi.org/10.1016/j.istruc.2019.05.011.

Lakshmikandhan, K.N. et al. (2017) 'Investigation on Wall Panel Sandwiched with Lightweight Concrete', in IOP Conference Series: Materials Science and Engineering. Institute of Physics Publishing. Available at: https://doi.org/10.1088/1757-899X/225/1/012275.

Lameiras, R. et al. (2021) 'Seismic behaviour of precast sandwich wall panels of steel fibre reinforced concrete layers and fibre reinforced polymer connectors', Engineering Structures, 237. Available at: https://doi.org/10.1016/j.engstruct.2021.112149.

Liu, X. et al. (2022) 'The Shear Behaviour of Insulated Precast Concrete Sandwich Panels Reinforced with BFRP', Buildings, 12(9). Available at: https://doi.org/10.3390/buildings12091326.

Lou, X. et al. (2022) 'Shear Behaviour of Stainless-Steel Plate Connectors for Insulated Precast Concrete Sandwich Panels', Structures, 44, pp. 1046–1056. Available at: https://doi.org/10.1016/j.istruc.2022.08.073.

Luo, Y.B. et al. (2022) 'SHEAR Behaviour of Noval Demountable Bolted Shear Connector for Prefabricated Composite Beam', Advanced Steel Construction, 18(4), pp. 745–752. Available at: https://doi.org/10.18057/IJASC.2022.18.4.2.

Mohamad, N. et al. (2016) 'Structural Performance of Recycled Aggregate in CSP Slab Subjected to Flexure Load', Construction and Building Materials, 115, pp. 669–680. Available at: https://doi.org/10.1016/j.conbuildmat.2016.04.086.

Refaie, F.A.Z., Abbas, R. and Fouad, F.H. (2020) 'Sustainable construction system with Egyptian metakaolin based geopolymer concrete sandwich panels', Case Studies in Construction Materials, 13. Available at: https://doi.org/10.1016/j.cscm.2020.e00436.

Sevil Yaman, T. and Lucier, G. (2023) 'Shear Transfer Mechanism between CFRP Grid and EPS Rigid Foam Insulation of Precast Concrete Sandwich Panels', Buildings, 13(4). Available at: https://doi.org/10.3390/buildings13040928.

Skadiņš, U. et al. (2023) 'Thin-Layer Fibre-Reinforced Concrete Sandwich Walls: Numerical Evaluation †', Fibers, 11(2). Available at: https://doi.org/10.3390/fib11020019.

Tawil, H. et al. (2024) 'Optimization of Shear Resistance in Precast Concrete Sandwich Wall Panels Using an S-Type Shear Connector', Buildings, 14(6). Available at: https://doi.org/10.3390/buildings14061725.

Wang, W. et al. (2021) 'Study on Shear Behaviour of Multi-Bolt Connectors for Prefabricated Steel–Concrete Composite Beams', Frontiers in Materials, 8. Available at: https://doi.org/10.3389/fmats.2021.625425.

Yu, J. et al. (2023) 'Stiffness analysis of shear stud group connectors in precast concrete deck', Engineering Structures, 274, p. 115148. Available at: https://doi.org/10.1016/J.ENGSTRUCT.2022.115148.

Zhang, Yujie et al. (2022) 'Shear Mechanism of High-Strength-Friction-Grip Bolts in Steel and Steel-Fiber-Reinforced-Concrete Composite Beams', Frontiers in Materials, 9. Available at: https://doi.org/10.3389/fmats.2022.899112.

Zhao, G. (1995) 'Tragverhalten von randfernen Kopfbolzenverankerungen bei Betonbruch', Deutscher Ausschuss fuer Stahlbeton, 454.