Latin American Journal of Solids and Structures
www.lajss.org

A Multi-objective, Active Fuzzy Force Controller in control of Flexible Wiper System

Abstract

Chaotic vibration has been identified in the flexible automotive wiper blade at certain wiping speeds. This irregular vibration not only decreases the wiping efficiency, but also degrades the driving comfort. A reliable nonlinear system identification namely nonlinear auto regressive exogenous Elman neural network (NARXENN) was adopted in first stage of this survey to model the flexible dynamics of wiper blade with acquired experimental data. In controller design part, taking into account environmental and external disturbances that cause changes in the dynamic characteristics of the system demanded a robust controller to make a trade off between the worst and best scenario. An active fuzzy force controller (AFLC) supervised by multi objective genetic algorithm (MOGA) is developed to keep both interests of noise and vibration redaction of automobile wiper blade at the reasonable rise time.

Keywords

Automotive wiper, system identification, fuzzy logic, active force control, multi objective genetic algorithm

Ali Zolfagharian[a,*]
Seyed Ebrahim Ghasemi[b]
Misagh Imani[c]

[a]Department of Mechanical Engineering, Qaemshahr Branch, Islamic Azad University, Qaemshahr, Iran
[b]Young Researchers and Elite Club, Qaemshahr Branch, Islamic Azad University, Qaemshahr, Iran
[c]Department of Mechanical Engineering, Sari Branch, Islamic Azad University, Sari, Iran

[*]Author's email:
zolfagharian.ali.utm@gmail.com

1 INTRODUCTION

Wiper system is the one of the flexible parts in automotive industry. Flexibility feature of wiper blade structure is made it a critical apparatus is spite of its simple operational mechanism. Vibration amplitude and undesirable unsteady deflection of wiper blade while operating on presence of external disturbances stem from its flexibility character. In an automobile wiper operation there have been diagnosed and classified three categories of noises such as squeal noise, chattering noise and reversal noise (Chevenenment et al., 2007). These types of noise have a potential to lead a poor visibility and annoying sound to the driver and passengers during the raining condition. The wiping of the windshield of a car is carried out with the reciprocating motion of a rubber blade on glass that removes the water from glass. This function is realized by a contact dimension between the rubber and glass of

a few tens of micrometers. A good wiping is characterized by a homogeneous disposal of the water, without noise generation and by limiting as much as possible the phenomenon of wear (loss of wiping or noise presence).

A new approach has been proposed to stabilize the chaotic vibration in the automotive wiper system by Wang and Chau (2009). They suggested a control method in such a way that the applied voltage of the DC motor is online adjusted according to its armature current feedback. Based on a practical wiper system, it is verified that it not only effectively stabilizes the chaotic and sub-harmonic motions, but also minimizes the amplitude of vibrations of the wipers throughout the whole operating range. Chaotic motion and its control in an automotive wiper system, which consists of two blades driven by a DC motor via one link was analyzed by Chang and Chen (2006). The dynamical behaviours were numerically investigated by means of time responses, Poincare maps and frequency spectra. By using largest Lyapunov exponents, the periodic and chaotic motions were verified. Finally, they applied the state feedback control method to control chaotic motions effectively. Koenen and Sanon (2007) proposed to approach four typical phenomena occurring on rubber wiper blades. Also, they described the evolution of dry friction coefficient with temperature. Later, they approached the influence of velocity on the friction coefficient of a wiper rubber blade by water. They found a relationship between the stick–slip and the squeal noise. The dry and wet friction of a commercial wiper blade was investigated by Bódai and Goda (2014). The effect of load and velocity on sliding friction was studied at specimen-level experimentally; the material response was characterized by (dynamic mechanical analysis) DMA tests, while the contact behaviour was analyzed by plain strain finite element models.

An intelligent infrared windscreen wiper based on infrared rain sensor was designed by yanyan et al. (2011). The infrared diode of high luminance was used as the lamp-source to irradiate the windscreen of automobile. The optical signal is received by the infrared receiver and will be changed into voltage. After shaping and filtering, the voltage will be sampled and manipulated to control the intermittence of the motor of windscreen wiper. Further, several methods like dither signal, extended time-delay feedback control and the optimized command shaper control methods were applied for controlling the chaotic motion of wiper blade (Wang and Chau, 2009, Zolfagharian et al., 2011).

The main contribution of this study in comparison to the similar researches in open literature is to deal with the vibration and noise characteristics of wiper blade in both time and frequency domains concurrently. An experimental method verified with a finite element analysis (Awang et al, 2009) is carried out for past processing system identification and control of wiper system. Low frequency noise known as chatter noise were identified in wiper system during operation and is subjected to be suppressed while does not violate other oscillatory attributions of wiper system in time domain. A novel bi-level active fuzzy logic force control (AFLC) is devised in which fuzzy logic controller (FLC) is collaborated in cascade with active force controller (AFC) and both are administered by multi objective genetic algorithm (MOGA) in two different level to estimate the most appropriate values of controller parameters.

Flexible dynamic of a wiper system requires a reliable system identification method to model transfer function of wiper system for helping designer in developing more accurate controller. Although parametric identification approach such as least square (LS) or recursive least squares (RLS) algorithms have got broad applications for parameter estimation in modeling slowly varying dynamic systems (Warwick et al., 1999). In order to control vibration and noise of wiper system which is considered as a flexible manipulator with several modes of vibration it was proved that nonparametric approaches and specifically neural network (NN) performed better at higher resonant modes than conventional recursive least square (RLS) even in problems associated with non-minimum phase characteristics of the system (Shaheed and Tokhi, 2002).

In Elman neural network (ENN) unlike multi layer perceptron (MLP) which merely uses feed forward connections there is a set of carefully chosen feedback connections that allows the network remember cues from the recent past (Elman, 1990). Taking into account this as well as the authors previous investigations on using different intelligence modeling for the purpose of nonlinear flexible system identification and control (Darus and.Tokhi, 2005, Tokhi and Zain, 2006, Darus and Tokhi, 2006) justified that the memory function with a dynamic feedback of neural network can effectively solve this sort of problems. Hence, A nonlinear auto regressive exogenous (NARX) in cascade with Elman neural network (ENN) is utilized for the purpose of system identification of nonlinear wiper system.

Due to flexibility of wiper blade NARX system identification model was employed that have been shown to be accurate and suitable for nonlinear system identification (Chen and Billings, 1989, Chiras et al., 2001). Sahoo et al. (2013) proposed NARX model structure with functional expansion of input patterns by using low complexity ANN (artificial neural network) for nonlinear system identification. The past input and output samples were modeled as a nonlinear NARX process and robust H∞ filter was proposed as the learning algorithm for the neural network to identify the unknown plants. H∞ filtering approach was based on the state space modeling of model parameters and evaluation of Jacobian matrices. This approach is a way to develop a type of Kalman filter which exhibits robust characteristics and fast convergence properties. The tracking results along with Mean Square Error (MSE) comparisons clearly demonstrated the superiority of this approach for dynamic nonlinear system identification in a very high noisy condition. A modified type of ENN is used in this study for dynamic modeling of wiper blade system with Bang-Bang input, and end-point acceleration and hub displacement as outputs.

In order to handle great performance of control system within uncertain circumstances, traditional controllers i.e. proportional, integrative, derivative (PID) controllers are not the best choice due to constrainrs imposed on gains regulation (Zolfagharian et. al, 2012). Fuzzy logic controller (FLC) has advantage of control a system by means of expert knowledge and regardless of actual dynamic of plant (Zadeh, 1973). Some applications of FLC in flexible link control, system identification and parallel manipulator control problems can be found in Cohen et al., (2002) Alam and Tokhi, (2008) and A. Noshadi et al., (2011). Also, some efforts were done for cooperating FLC with evolutionary and swarm approaches (Chatterjee, et al., 2005, Alam, and Tokhi, 2008).

In multi objective control problem it is necessary to estimate a number of parameters or gains for the control scheme that in turn introduces more complexity to the scheme. To tackle this, MOGA is utilized in control loop in order to attain a trade off solution. Multi-objective Genetic Algorithm (MOGA) using fitness sharing technique is adopted in this study due to its versatile character of dealing with various conflict objectives and their constraints. MOGA based on fitness sharing have been successfully applied in other control engineering problems of flexible manipulators (Silva et al, 2008, Toha and Tokhi, 2010).

A typical FLC that requires hub-angle and hub-velocity information of wiper system is initially employed for controlling the unwanted vibration and annoying noise of wiper system. Further, an AFC is devised to insert robust characteristic to controller for possible uncertainty that occurs during operation of wiper. Finally, in order to cope with complexity of controlling the multi conflict objectives in both time and frequency domains a multi objective optimization method using MOGA is utilized to tune the corresponding membership functions shape, gains of FLC and of AFC. A Detail of the proposed controller is illustrated in **Fig. 1.**

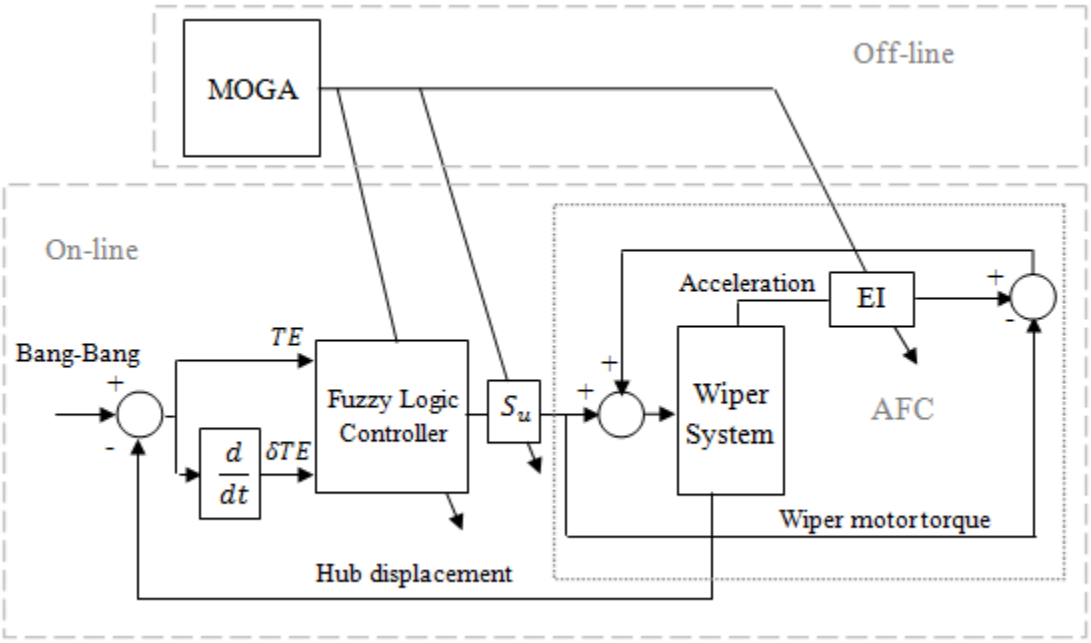

Figure 1 Schematic representation of bi-level active fuzzy force Controller using MOGA

The paper is brought to you as follows. Data acquisition and test rig set up is presented in section 2. A brief presentation of the techniques applied in proposed controller as well as system identification method is described in section 3. Section 4 presents the simulations and results and finally conclusion is drawn in section 5.

2 DATA ACQUISITION

This research is performed in two separate phases. The acquisition application is a real time program responsible for acquiring and recording the wiper system signals. The analysis package runs off-line and handles the recorded data and proposing an efficient controller standing by experimental tests.

The experimental rig used in this study is consisted of a uni-blade type wiper which is typically found in the Proton Iswara driven by its corresponding DC Wiper Motor in hub, measuring devices, interface card and digital processor. The wiper blade can be considered as a pinned-free flexible arm that moves freely in the horizontal plane of windscreen while the effect of axial force is neglected. Technical specifications of DC wiper motor are respectively shown in **Table 1**. A pipe hose with running water is facilitated on the top of windscreen that simulates a rainy or wet condition for operating wiper at speed of Bang-Bang input. The measurement sensors including a Kistler Type 8794A500 tri-axial accelerometer mounted at the endpoint of the wiper blade using beeswax for measurement of endpoint acceleration as well as a shaft encoder placed at the hub of wiper for measurement of hub angle. Recording the input signals is carried out at digital sampling rate of *1* kHz. The endpoint acceleration data is used as feedback to the system and measured as an indicator for assessing the performance of the proposed controller for chattering noise reduction of system. Only main hub angle displacement measured by the encoder, is used in the proposed controller to rigid body motion control of the system. Digital noise filters are also utilized in PC to reduce noisy signals from the sensors. In the experiment, a 16 input channels PAK MK II Muller BBM signal analyzer were used. The signals are converted into FRF through PAK analyzer. The analyzer was connected to a laptop to display the results. The experiment equipments were shown in **Fig.3**.

Table 1 Technical Specifications of DC Wiper motor P/N 1020.

Specifications	Values
Current Limit Setting	~20Amps
Duty Cycle	0 to ~99.9%
PWM switching rate	~15 Khz
Digital Input low	0 to .8V
Digital Input High	3.5 to 5V
Speed	70rpm at 12v
Rotation Degrees	360 degrees
Position Resolution	10 bits
Reversing Delay Time	0 sec (depends on ramp rate)
Operating Voltage	10V to 24V



a) b)

Figure 2 (a) Kistler type 8794A500 tri-axial accelerometer; (b) PAK MK II Muller BBM analyzer.

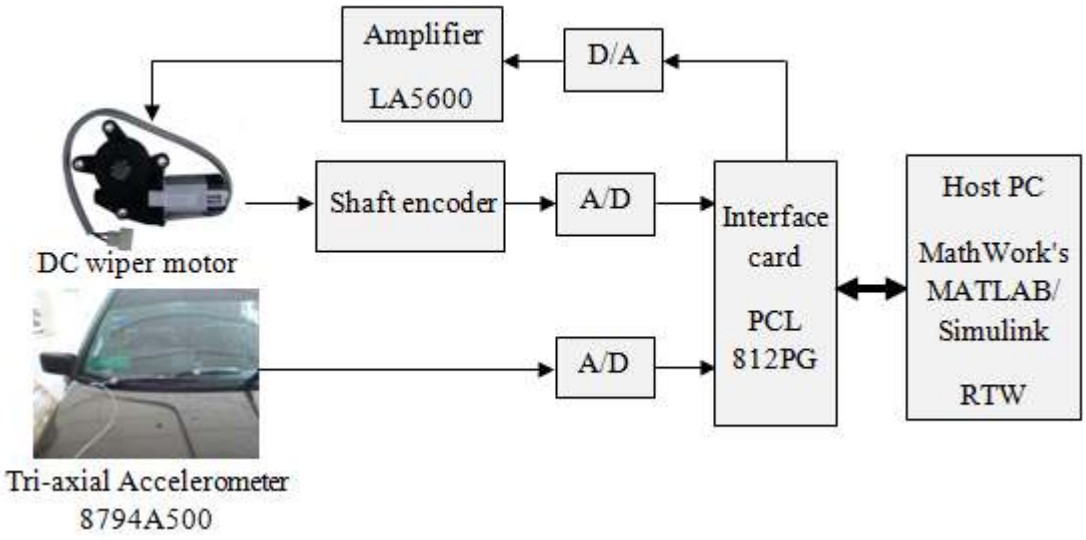

Figure 3 A schematic diagram of proposed controller interfaces.

As the wiper motor needs to be driven in both directions to control the unwanted noise and vibration a bi-directional motor drive amplifier is required. This motor drive amplifier (current amplifier) delivers a current proportional to the input voltage. So, a linear drive amplifier LA5600 can be employed as motor driver. It serves as a velocity/position controller as well as a motor driver. The shaft encoder placed on hub of wiper send the analogue information of the hub angle of the wiper to process unit of controller after being converted to digital values. An interface circuit PCL 812PG is needed to interface the wiper system with a host PC and carrying out data acquisition and control between the processor, the actuator and sensors with 25 μs for A/D conversion and a settling time of 20 μs for D/A conversion. The MathWork's MATLAB/Simulink is used for real-time Proceeding of the controller implementation through real time workshop (RTW). In this work, the experimental set-up requires one analogue output to the motor driver amplifier and three analogue inputs from the hub-angle, end-point acceleration, and motor current

sensors while the endpoint acceleration data is only used as a performance indicator. A schematic diagram of proposed controller interfaces used in this work is shown in **Fig. 3**.

3 METHODOLOGY

3.1 Active force control

Nearly three decades are passed since a robust method named active force control (AFC) has been introduced by Hewit and Burdress (1981). Afterwards the method has been adopted in many studies to deal with the trajectory tracking tasks of rigid robot manipulators in the presence of known and unknown disturbances. Surprisingly, the technique verified to be quite effective in this task in comparison to its counterparts in spite of possessing trouble-free mathematical algorithm.

They showed that by using this method, the system subjected to environment uncertainties, disturbances or any other changes in system parameters, remains stable and robust. The successful operation of AFC method as a disturbance rejecter scheme compared to the traditional control methods such as the PID controller is proven in the literature (Hewit and Burdress, 1981, Noshadi et. al, 2011).

Other advantages of application of AFC as a disturbance rejection in this study are because of its low computational burden and few input information in a real time system. As it is shown in **Fig. 1** AFC requires only the acceleration information of wiper tip.

In the rotational bodies, Newton's second law expresses that, the sum of all torques applied to the system is equal to the multiplication of the mass moment of (I) to the angular acceleration (α) of the system, i.e. from

Considering well-known and functional second Newton law of motion of rotational bodies as:

$$\sum \boldsymbol{\tau} = I\alpha \tag{1}$$

Where $\boldsymbol{\tau}$ is the applied torque of wiper motor and I and α are the mass moment of inertia and the angular acceleration of the wiper blade respectively.

An external disturbance $\boldsymbol{\tau}_{\mathrm{d}}$ is included in (1):

$$\boldsymbol{\tau} + \boldsymbol{\tau}_{\mathrm{d}} = I(\theta)\alpha \tag{2}$$

The main point of AFC is where disturbances have to be estimated somehow as:

$$\boldsymbol{\tau}_{\mathrm{d}}^{*} = \boldsymbol{\tau} - \boldsymbol{EI}\alpha \tag{3}$$

where $\boldsymbol{EI}$ is the estimated inertia matrix that can be obtained by crude approximation or other intelligent methods such as iterative learning, fuzzy logic and so on. MOGA has been used in this paper to estimate the most appropriate value for $\boldsymbol{EI}$ to achieve a desirable trade off among all objectives even in presence of external disturbance. $\boldsymbol{\tau}$, is the measured

applied control torque that can be estimated by a current sensor or directly by a force or torque sensor and the measured angular acceleration, i.e., $\ddot{\theta}$ can be obtained by an accelerometer. From (3) it is clear that if the total applied torque to the system and angular acceleration of each actuated joint are accurately obtained using measuring instruments and the estimated inertial parameters are needed in AFC loop for disturbance rejection are appropriately approximated, without having to acquire the knowledge about actual magnitude of the disturbance, the total torque disturbances can be rejected using AFC loop. A schematic diagram of developed AFC method as part of the proposed controller was depicted in the **Fig. 1**.

3.2 Fuzzy Logic

In current study, a fuzzy controller with two inputs named, the track error and rate of track error of the wiper hub displacement and one output which is in the path of a scale factor was developed. The inputs and output of the fuzzy controller are normalized within range of $[-1,1]$ while the appropriate location of membership functions' inputs as well as scale factor parameters have been tuned by MOGA for normalization purposes based on the following conditions:

$$TE = \max(-1, \min(1, S_{TE})) \tag{4}$$

$$\delta TE = \max(-1, \min(1, S_{\delta TE})), \tag{5}$$

where TE and δTE represent the track error and rate of tack error for hub displacement of wiper respectively. S_{TE} and $S_{\delta TE}$ are the best position of membership functions of TE and δTE which are aimed to be adjusted by MOGA. Similarly, the FL control output is denormalized using $U = S_u.\hat{u}$.

Membership functions of the inputs and output of fuzzy logic controller are shown in **Fig. 4**.

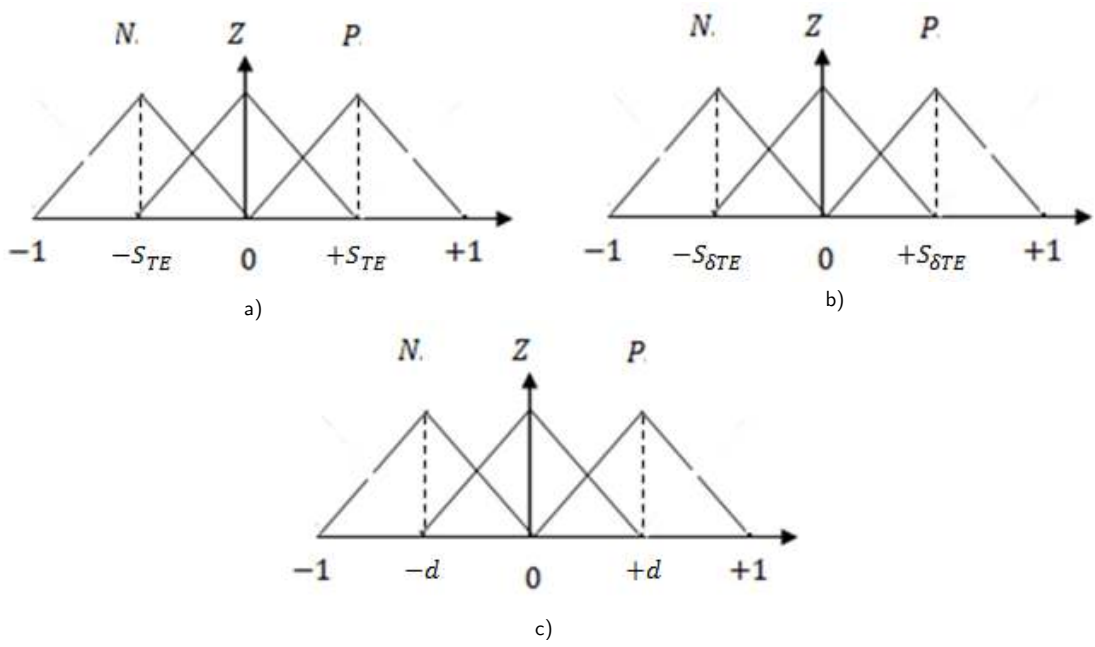

Figure 4 Membership functions illustration of FLC: (a) Track error input; (b) rate of track error input; (c) controller output.

The different values of S_{TE} for track error and $S_{\delta TE}$ for rate of tack error of controller lead to various shape of triangles. Since, the FL output is manipulated by S_u factor that is fine tuned by MOGA, the positions of output membership function ($\pm d$) are supposed to be constant as d=$\pm$0.5.

For the two inputs as well as output of the FL controller five triangles membership function were chosen for each; and a complete rule matrix of size 5×5 is defined in **Table 2**.

Table 2 FLC rule base with track error and rate of track error.

Track error (TE)	Rate of track error (δTE)		
	N	Z	P
N	P	P	Z
Z	P	Z	N
P	Z	N	N

The nth command of the rule base for the FLC, with track error and rate of track error as fuzzy inputs and $\hat{u}$ as fuzzy output, is given by:

C_n: If TE is NB and δTE is ZE then the $\hat{u}$ is PB

A two level fuzzy tuning methods whose normalized output parameter (S_u) as well as nonlinear tuning parameters (S_{TE}) and ($S_{\delta TE}$) are adjusted by means of MOGA is developed. The superiority of the proposed controller similar works is tuning nonlinear parameters of FL input membership that increase the robustness and performance of the controller without exceeding the maximum permitted value of S_u scale factor.

3.3 MOGA

In MOGA, fitness sharing technique is utilized to give confidence in the search toward the true Pareto optimal set while maintaining diversity in the population. Fitness sharing method is employed from Fonseca and Fleming (1995). The basic idea of fitness sharing is that all the individuals within the same region (called a niche) share their fitness. In fitness sharing method first a niche count is obtained from the Euclidean distance between every solution pair and then the fitness of each solution is assigned from the best individual to the worst according to some function, in the form of fitness function, such as linear or exponential, possibly other types. The greater fitness is understood here as the number of individuals decrease in the same rank. Details of this method can be found in Fonseca and Fleming (1995). The stochastic universal sampling method is used to select the best individuals (Goldberg and Richardson, 1987). However, mating restrictions are employed in order to protect lethal (Deb, 2001).

In this study binary encoding is used in order to convert real value objectives into binary. After ranking the individuals based on the multiplication of their fitness value and exponential pressure, the new individuals for next generation are chosen by stochastic universal sampling method. Multi-point crossover technique is used as well as the mutation process for every 200 bits transfers from the crossover process. Two random positions of the string are chosen and the bits corresponding to those positions are interchanged (Deb and Agarwal, 1995).

4 SYSTEM MODELING

4.1 Nonlinear Auto Regressive Exogenous (NARX) Model

The NARX model structure is defined by

$$y(k) = F\left(y(k-1), \dots, y(k-n_y), u(k-1), \dots, u(k-n_u)\right) + \varepsilon(k), \tag{6}$$

in which the effect of noise is assumed additive at output of the model. *F(.)* is a nonlinear function, y_k ,u_k and ε_k are output, input, and noise respectively where n_y, n_u and are maximum lags on observations and exogenous inputs (Chen and Billings, 1989). In order to

identify the NARX model; the corresponding *F(.)* function should be approximated first; so that in this study the nonlinear function *F(.)* is estimated by ENN.

4.2 Elman Neural Network algorithm

In the structure of an ENN there is an additional undertake layer called context layer besides the three conventional namely input, hidden and output layers that making the identification of dynamic characteristics (Elman, 1990). Suppose an ENN such is shown in **Fig. 5** in which the vectors of input, middle and output layers' nodes are labeled with u, x and y respectively. Also, W_1 , W_2 and W_3 represent the respective connection weights of input, middle and output layers. The nodes of input layer play the role of signal transmission while nonlinear functions of *M(.)* and *O(.)* are introduced as transfer functions of middle and output layers which in this study the tansigmoid function is used. Furthermore, the previous moment output values of hidden layer were stored in memory and return to the input, so it can be considered a step delay operator. The mathematical modeling of Elman Neural Network can be expressed as the following equations:

$$X(k) = M\big(W_2.u(k) + W_1.u(k-1)\big) \tag{7}$$

$$y(k) = F\left(y(k-1),\dots,y\big(k-n_y\big),u(k-1),\dots,u(k-n_u)\right) + \varepsilon(k), \tag{8}$$

A back propagation (BP) algorithm as it broadly used and discussed in literature was adopted for training process of neural network. BP uses the error sum of squares function between output of network and target values (Srinivasan et al., 1994):

$$E(W) = \sum_{n=1}^{k} [y_n(W) - T_n(W)]^2 \ , n = 1,2,3,\dots,k \tag{9}$$

where $T_n(W)$ is the target vector of output.

Schematic model of proposed system identification named Nonlinear Auto Regressive Elman Neural Network (NARXENN) is illustrated in **Fig. 5**.

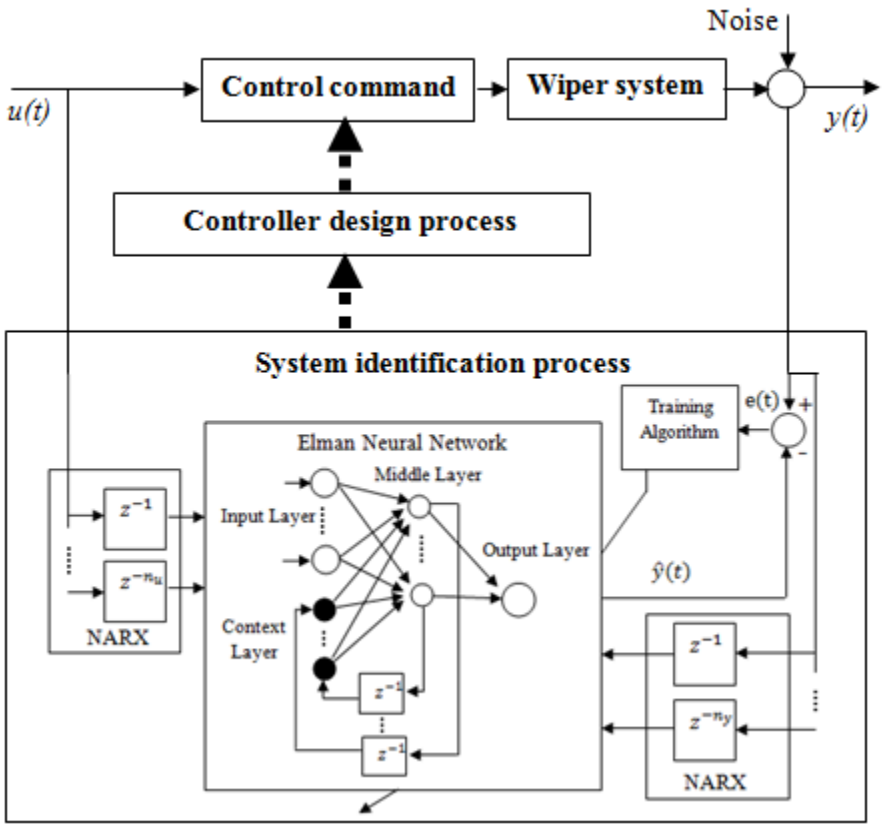

Figure 5 Developed NARXENN for system identification of wiper system.

For the modeling process, input-output data were collected for a wiper system. Then, performing the one value at the moment the best maximum lag of the data in NARX model was found as $n_x = n_y = 7$. Subsequently, ENN with two hidden layers, each with 10 tansigmoid neurons and two linear output layers was trained. The process is adjusted until the prediction output satisfied a model validation test and model mean squared errors (MSE) level reached to 0.000048. In **Fig. 6** the MSE of NARXENN versus epochs of learning as well as error between actual and predicted end-point acceleration are illustrated.

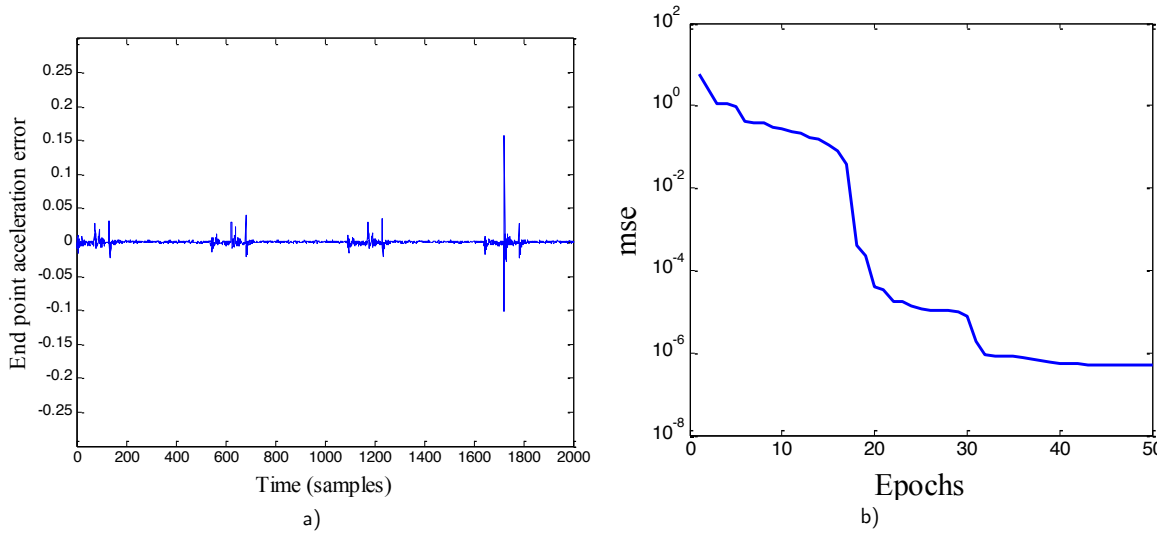

Figure 6 (a) Error between actual and predicted end-point acceleration; (b) MSE of NARXENN.

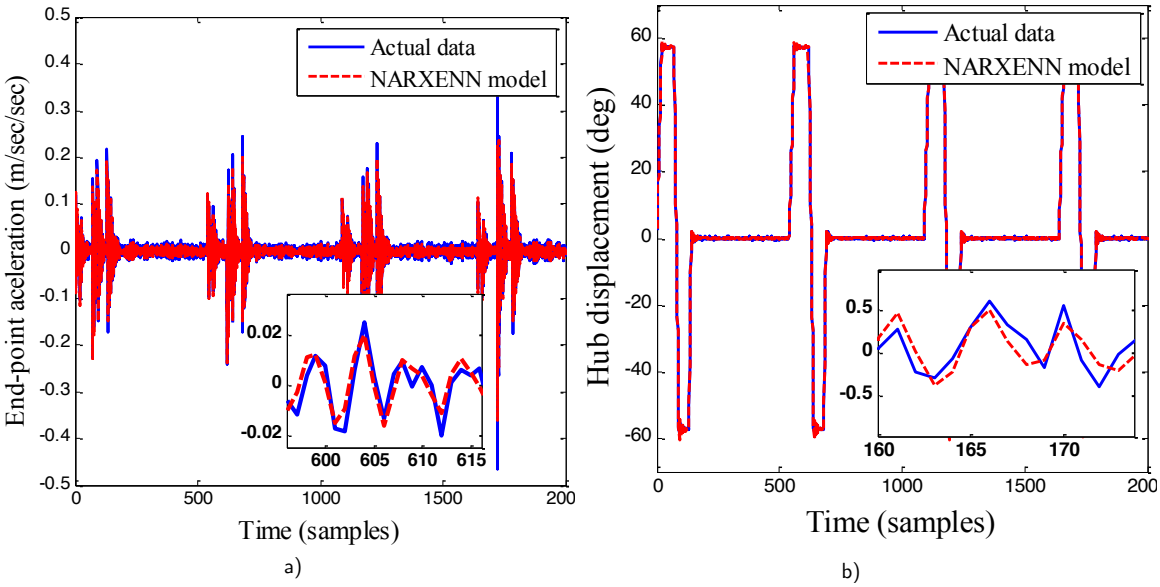

Figure 7 Time domain modeling of wiper lip response: (a) End-point acceleration of wiper lip; (b) Hub displacement.

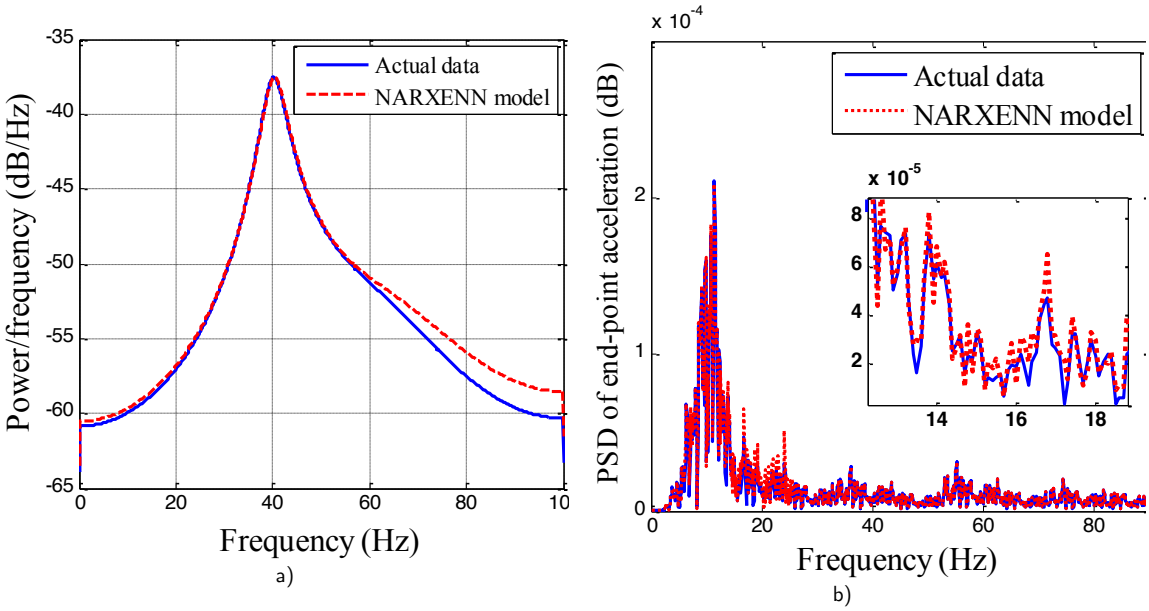

Figure 8 Frequency domain modeling of wiper lip response: (a) PSD of end-point acceleration; (b) Yule-Walker spectral density of end-point acceleration.

The fitting accuracy of predicted system for one step ahead (OSA) prediction of the corresponding end-point acceleration and hub-angle responses of the actual system compared to NARXENN are shown in **Fig. 7.**

The illustrated results of actual and predicted power spectral density (PSD) and Yule Walker power/frequency of end-point acceleration in frequency domain in **Fig. 8** prove that, there is an acceptable comparison between system identification results and actual results in frequency domain as well.

5 RESULTS AND DISCUSSIONS

5.1 Estabilish the cost functions

Three cost functions of wiper system's dynamic characteristics are defined to be considered in this study. Integral of absolute end-point acceleration (IAEA), maximum overshot of hub displacement and rise time of hub displacement response; are objectives that are aimed to be minimized and defined as:

- Integral absolute value of end-point acceleration (IAEA):

$$IAEA = \int_0^T |y_{EA}(t)|\, dt, \tag{10}$$

where $|y_{EA}(t)|$ singnifies the acquired signal of end-point acceleration of wiper blade. IAEA denotes the integral area of acceleration response of wiper blade respect to time. It is a

representative of noise level of wiper while two other objectives assess the performance of controller in trajectory tracking in time domain.

- Rise time: The time required for system hub displacement response to rise from 5% to 95% of the final steady state value of the desired response.
- Maximum overshoot: The maximum peak value of the hub displacement response curve measured from the desired response of the system.

In the engineering pursuit, designers are frequently come across with trade-off problems. In the design of proposed multi-objective adaptive-fuzzy controller such trade-off is emerged in relationship between rise time and vibration amplitude. Typically, in flexible manipulator and structure dynamics control often the low levels of residual vibration cannot be obtained with a command that produces the fastest rise time (Zain et al., 2006, Tokhi and Zain 2006, et al., Alam and Tokhi, 2008). In most cases, to achieve the low levels of vibration and highest robustness, the rise time must be increased which in not desirable. IAEA and maximum overshoot are objectives in accord; while the rise time index of wiper lip is in obvious conflict with two aforementioned objectives.

5.2 Fuzzy Logic Controller

First, a typical FLC which its required parameters such as normalizing scale factors and membership functions shape were heuristically tuned is applied to wiper system. From the results illustrated in **Figs. 9** and **10** it is observed that FLC is capable of reducing the vibration and noise at the end-point of the manipulator in comparison with a response of open-loop bang-bang input torque.

Nonetheless, further study revealed the deficiency of FLC in vibration and noise elimination of wiper blade in presence of external disturbance and uncertainty (**Fig. 14)**. Hence, an essence of an effective controller for reduction of chatter noise level of wiper blade simultaneously with accurate trajectory tracking of wiper hub angle was demanded. In order to achieve such controller it is required to add an additional control loop accounting for flexural motion control of the system. An extended control structure for control of a flexible wiper blade is devised. In the proposed controller two different loops of AFC and FLC are accumulated to send most accurate command to input torque to reject any unknown external disturbance. The control scheme has been devised within a simulation environment and is standing by an experimental rig.

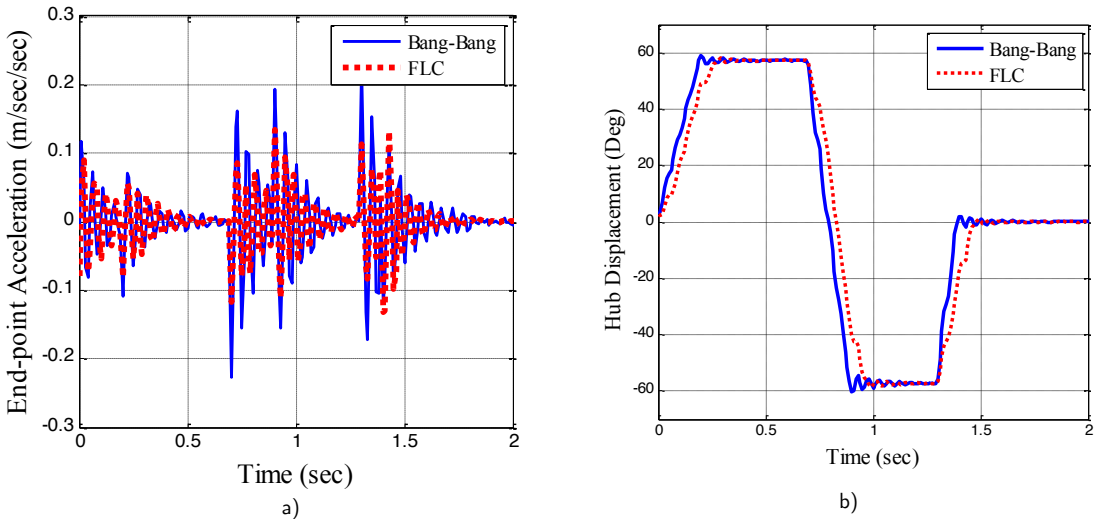

Figure 9 Time domain response of wiper lip without disturbance: (a) End-point acceleration of wiper lip; (b) hub displacemen.

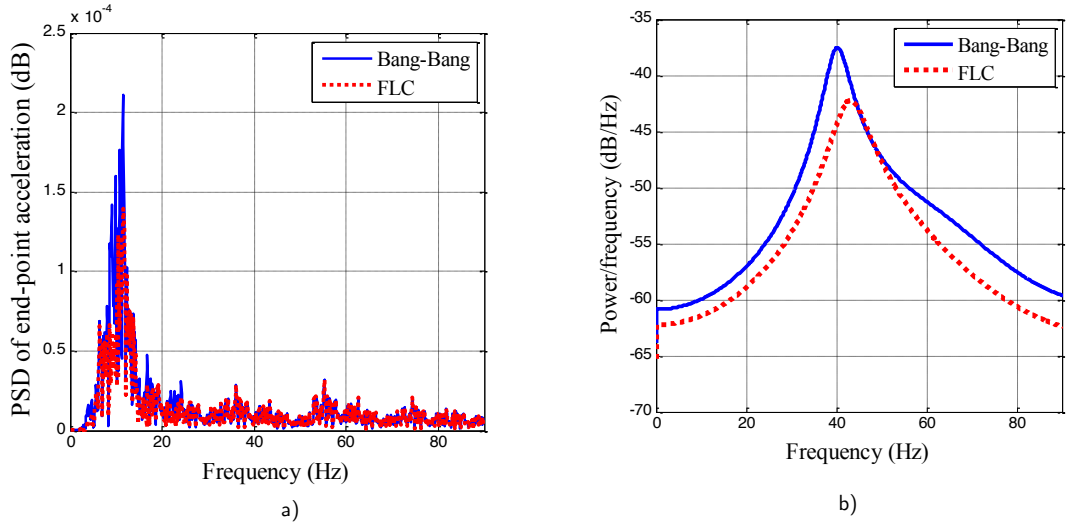

Figure 10 Frequency domain response of wiper lip without disturbance: (a) PSD of end-point acceleration; (b) Yule-Walker spectral density of end-point acceleration.

To validate the effectiveness of the proposed controller in presence of external disturbance a harmonic disturbance (τ_d) is imposed to the wiper over the time in following investigation:

$$\tau_d = 3\cos(5t) \tag{11}$$

5.3 Active fuzzy force Control regulated with MOGA

In a multi objective Pareto based optimization problem it shall be assumed that the true Pareto front is unknown; therefore the only means of evaluation available is to compare the MOGA solutions against each other. Hypervolume indicator is adopted in this study (Zitzler et al., 1999).

Hypervolume indicator assesses the convergence of algorithm toward Pareto front as well as preserving the distribution of Pareto front throughout objectives space. In other words, this metric explores the extent of the objective space covered by a set of solutions which is restricted by setting a suitable reference point. In case of minimization problem, like the case of current paper the reference point is set in such a way that exceeds the constraint of each objective. Therefore, once this metric is applied to compare the performance of an algorithm in successive iterations; as the number of non-dominated solutions and their distribution throughout the objective space increases the Hypervolume indicator's value represents the greater value

MOGA initialized with a random population consisting of 50 individuals and maximum generation of 100 as termination criterion. The population is represented by binary strings each of 30 bits, called chromosomes. Each chromosome consists of five separate strings constituting rest three terms are specified to FL membership positions and the rest two are specified proportional and integrative sale factors of ILC controller. Using educated guess a reasonable range of these parameters that ensure stability of system is defined. The crossover rate and mutation rate for this optimization process were set at 90% and 0.01%, respectively. Moreover, Epanechnikov fitness sharing genetic technique was used to ensure that the best solution of each generation is selected for the next generation so that the next generation's best will never degenerate and hence guarantee convergence of the GA optimization process.

Hypervolume indicator of MOGA for adjusting controller parameters is sown in **Fig. 11**. It can be clearly seen that the overall number of Pareto front members found in each generation and their diversity throughout the objective space are increased as the number of generations goes on so that the maximum value of Hypervolume is obtained at last generation.

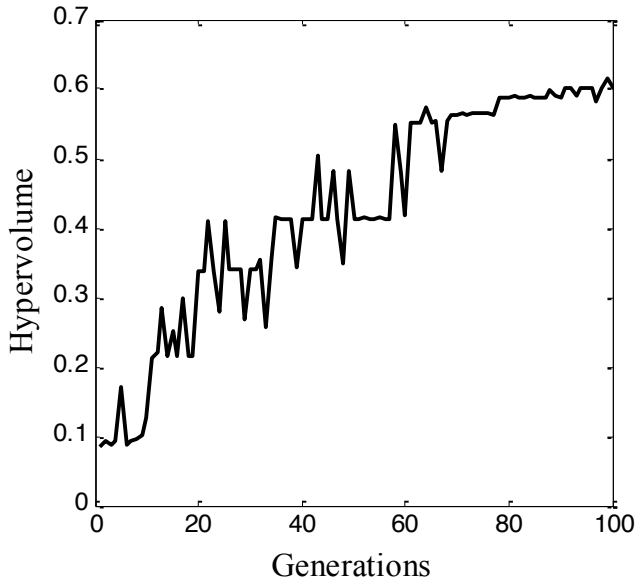

Figure 11 Hypervolume indicator of wiper system objective space using MOGA

Fig. 12 illustrates the explicit conflict of maximum overshot and IAEA for Pareto optimal sets of wiper blade objectives. This miscorrelation makes the decision tough for designer to choose the best trade-off. However, the non-dominated Pareto set depicted in **Fig. 12** proves that IAEA and maximum overshot are highly non-competing, and it is important for the decision maker, as it conceptually reduces the complexity of the problem.

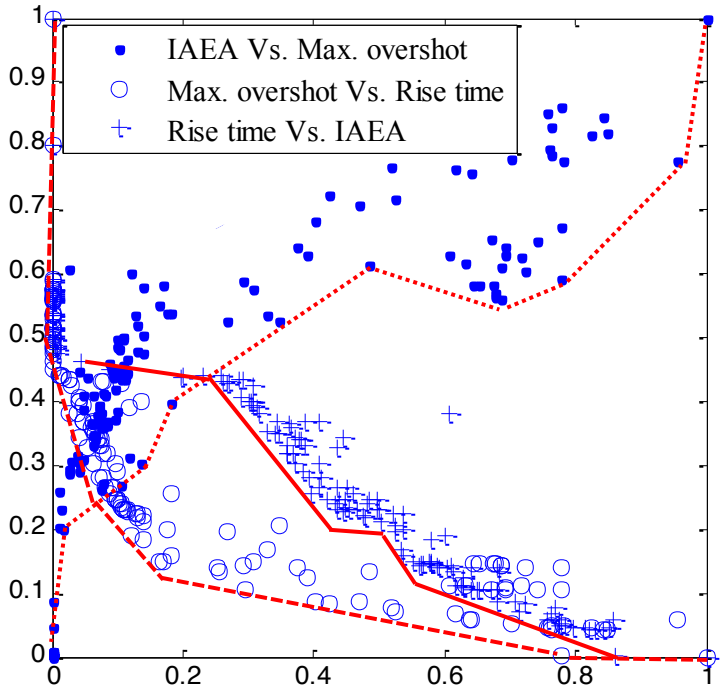

Figure 12 Optimal Pareto sets illustrations of pair objectives

Values for different parameters of AFLC and their corresponding objectives measures are inserted in **Table 3**. In **Table 3** the most significant non-dominated samples of Pareto optimal sets between the robustness performances versus rise time improvement of wiper blade is shown. It can be deduced that the smallest rise time of system is obtained in Trade 2 with unfavorable IAEA and maximum overshot. Further, the least amounts of vibration objectives are achieved in sol. 6 at the expense of longest rise time. However, in case of current design, the Trade 3 is deemed to be preferred to others that lead to the most reasonable values of IAEA, maximum overshot and rise time of wiper blade. Glimpsing at other tradeoffs in **Table 3** reveals that though Trade 5 has greater vibration reduction and wiper hub trajectory tracking rather Trade. 3 but this is achieved at the expense of longer system delay or rise time. Also, diverse compromised of objectives can be seen in other solutions, shown in the table so that each of them can be obtained by adjusting the location of membership functions as well as corresponding scale factors of AFC.

Table 3 Controller parameters and objective values

Trade No.	Objectives			Controller parameters			
	$IAEA$ m/s^2	Rise time (s)	Max. overshot (%)	S_{TE}	$S_{\delta TE}$	S_u	EI
1	1128	0.06	98	0.167	0.824	0.550	6.424
2	754	0.07	79	0.272	0.969	0.624	1.349
3	169	0.11	24	0.575	0.486	0.523	3.416
4	714	0.08	63	0.128	0.319	0.574	2.867
5	128	0.18	0.04	0.634	0.322	0.447	6.422

An instances trade off of Pareto front sets for IAEA, rise time and maximum overshot of wiper blade is shown in **Fig. 13.** The x-axis shows the design objectives and the y-axis signifies normalized values of each objective. The conflict behavior of objectives is deduced from crossing lines between adjacent objectives while parallel lines are evident of harmony between the objectives solutions.

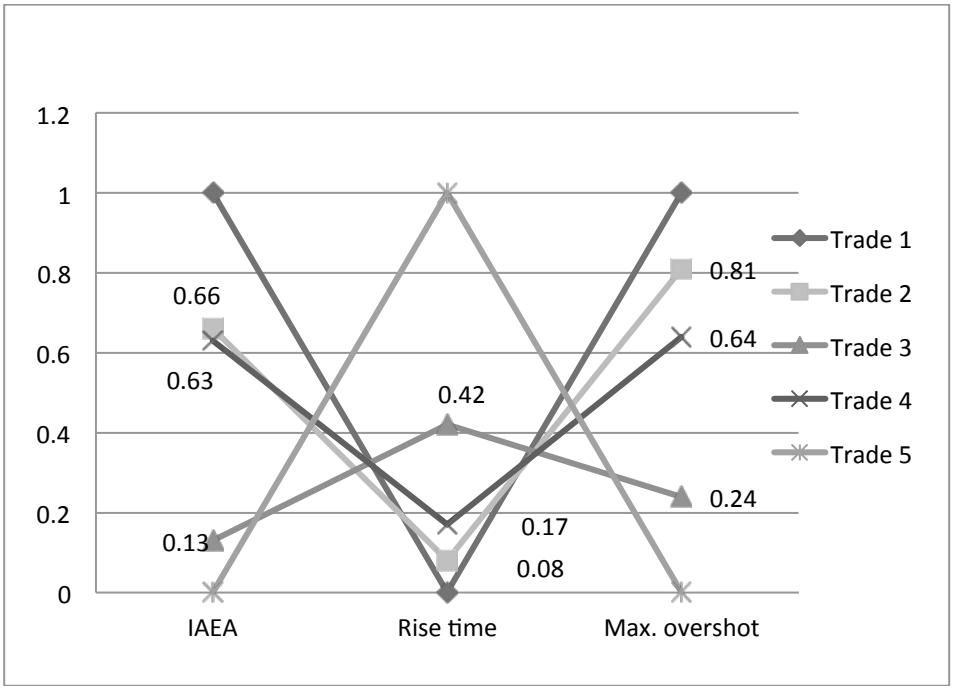

Figure 13 Trades off samples among three objectives' Pareto set.

Bearing in mind the most important mission of proposed controller to achieve most appropriate vibration and noise reduction of wiper blade in frequency domain as well as maintaining the minimum rise time of system simultaneously convince the designer to vote on behalf of Trade. 3 with the e

stimated values of IAEA, maximum overshot and rise time of wiper blade *169*, *24* and *0.11 s* respectively.

The evidence of robustness of developed controller can be deduced from **Fig. 14**, which shows the response of wiper lip acceleration and tracking the desired Bang-Bang input task. **Fig. 14a** proves the significant dampening of end-point acceleration using the proposed controller rather the FLC alone in the presence of disturbance. In **Fig. 14b** the high distortion of open loop wiper lip in tracking the desired trajectory in present of uncertainty is obvious while the least fluctuation in minimum rise time has been attained using the proposed controller. Furthermore, the deficiency of FLC controller in comparison to the developed controller with applying external disturbance can readily be seen in terms of end-point acceleration, rise time and maximum overshot.

Moreover, the effectiveness of proposed controller for suppressing chatter noise of wiper system is shown in **Fig. 15**. It was found that the PSD and Yule-Walker amplitude of the wiper end-point significantly reduced with applying AFLC controller compared to Bang-Bang input and even solitary FLC controller with presenting the disturbance. Performance measurements of various controllers in normalized index are illustrated in **Fig. 16.** It is evident that, substantial attenuation is achieved with applying AFLC compared to Bang-Bang input and FLC controller in presence of disturbance.

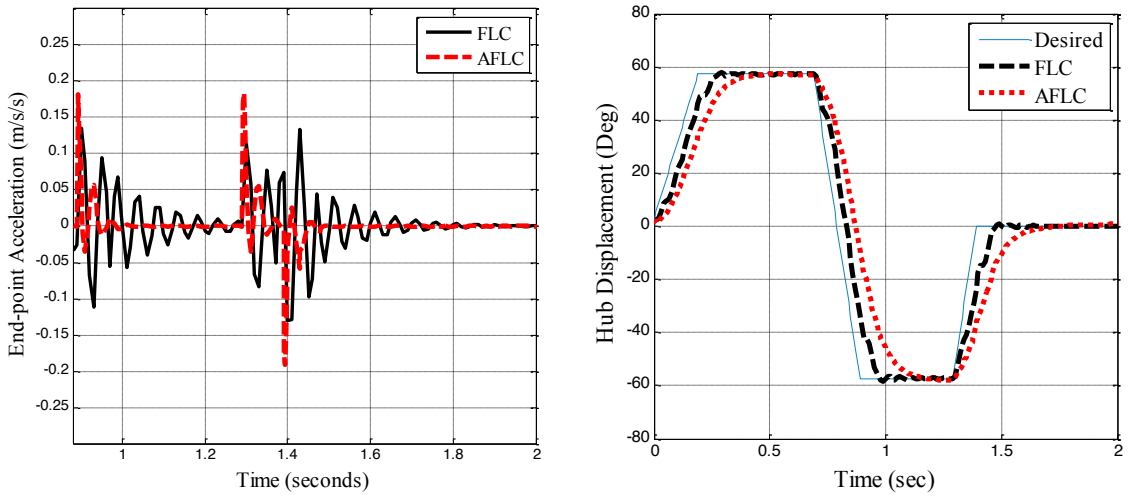

Figure 14 Time domain response of wiper lip in presence of disturbance: (a) End-point acceleration of wiper lip; (b) hub displacemen.

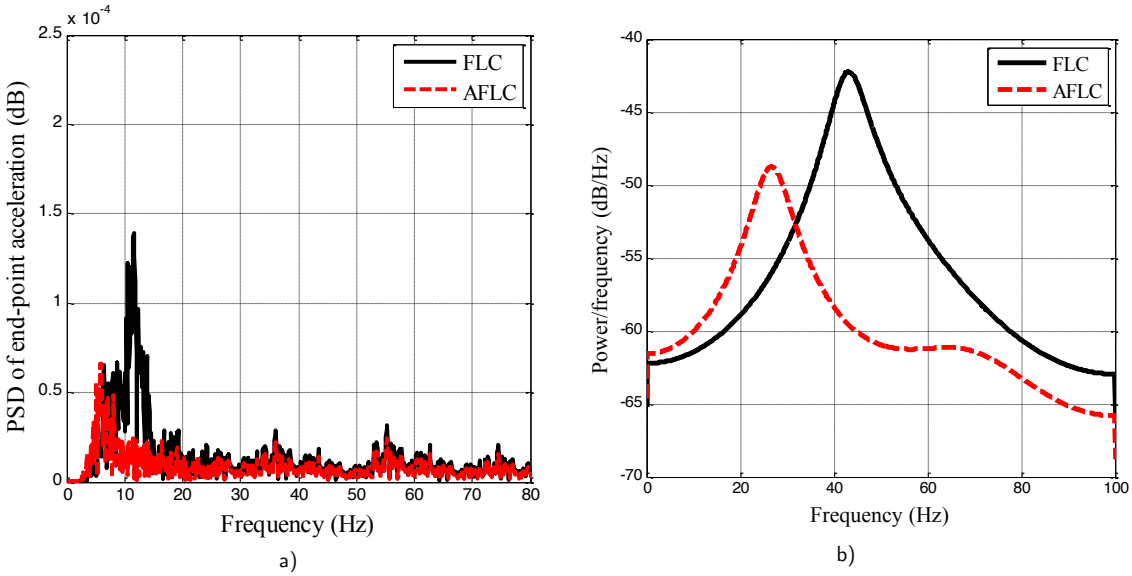

Figure 15 Frequency domain response of wiper lip in presence of disturbance: (a) PSD of end-point acceleration; (b) Yule-Walker spectral density of end-point acceleration.

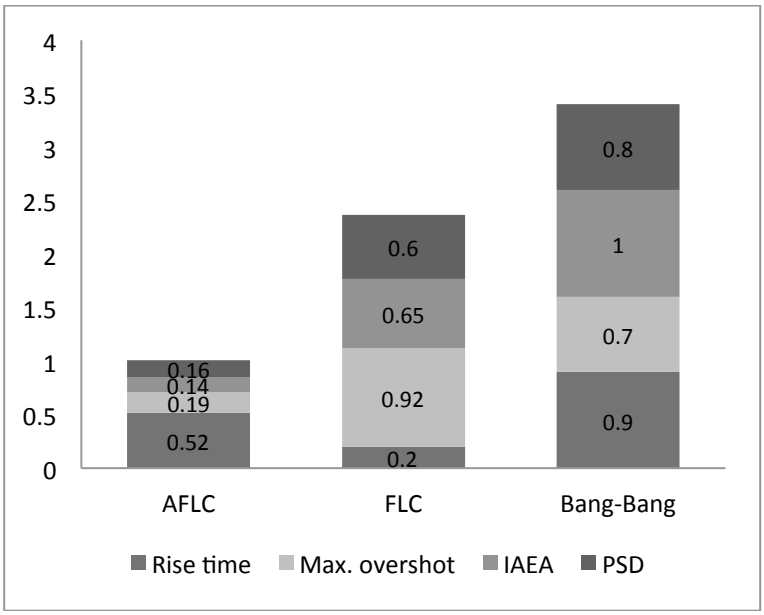

Figure 16 Performance measurements of various controllers.

6 CONCLUSION

Majority of conventional robust controllers are designated to reject the predefined dynamics and bounded disturbances due to the discontinuous nature of the control law. Wiper blade is a flexible dynamics structure that confronts several uncertainties within its operation. Two levels controller was required for flexible wiper in order to deal with vibration and noise caused by both rigid and flexible parts of system. FLC is set as outer control loop that receives the error between actual Bang-Bang trajectory and the actual measurement of wiper hub angle as well as the rate of mentioned error. The inner loop control loop is an AFC that is in charge of noise and vibration reduction of flexible characteristic of wiper in presence of external disturbance. Indeed, the most appropriate value of the estimated inertia for satisfying different conflict objectives is acquired by means of MOGA. The main idea of the active force control using MOGA scheme is to calculate the estimated inertia in presence of external uncertainty while FLC is assigned to compensate vibration caused by rigid part of wiper blade.

References

Alam M.S., Tokhi M.O., Hybrid fuzzy logic control with genetic optimisation for a single-link flexible manipulator, Engineering Application of Artifitial Intelligence 21 (2008) 858–873.

Awang I.M., AbuBakar A.R., Ghani B.A., Rahman R.A., Zain M.Z.M., Complex eigenvalue analysis of windscreen wiper chatter noise and its suppression by structural modifications, Int. J. Vehic. Struc. Syst. 1(1-3), (2009) 24-29.

Bodai G., Goda T. J., Sliding friction of wiper blade: Measurement, FE modeling and mixed friction simulation, Tribology International 70 (2014) 63–74.

Chang S.C., Chen S.C., Dither signals with particular application to the control of windscreen wiper blades, Int. J. Solids Struct. 43 (2006) 6998–7013.

Chatterjee A., Pulasinghe K., Watanabe K., Izumi K., A Particle swarm optimized fuzzy–neural network for voice-controlled robot systems, IEEE Trans. Ind. Electron., 52(6) (2005) 1478-1489.

Chen S., Billings S.A. Representations of non-linear systems: the NARMAX model, Int. J. Control 49 (1989) 1013-1032.

Chevennement R.C., Dreher T., Alliot P., Aubry E., Lainé J.P., Jézéquel L., Flexible wiper system dynamic instabilities: modelling and experimental validation, Exp. Mech. 47 (2007) 201–210.

Chiras N., Evans C., Rees D., Nonlinear gas turbine modeling using NARMAX structures, IEEE Trans. Instrum. Meas., 50(4) 2001 893-898.

Cohen K., Yaffe R., Weller T., Ben-Asher J.Z., Experimental studies on adaptive fuzzy control of a smart structure, J. Vib. Control 8 (8) (2002), 1071–1083.

Deb K., Agarwal R., Simulated binary crossover for continuous search space. Complex Systems, 9 (1995) 115–148.

Deb K., Multi-objective optimization using evolutionary algorithms, Chichester: Wiley, New York, 2001.

Elman J., Finding structure in time, J. Cognitive Sci., 14 (1990) 179-211.

Fonseca C.M., Fleming P.J., An overview of evolutionary algorithms in multiobjective optimization, Evol. Comput., 3(1) (1995) 1-16.

Goldberg D.E., Richardson J., Genetic algorithms with sharing for multimodal function optimization, In J. Grefenstette, (Ed.), Proceedings of the Second International Conference on Genetic Algorithms, Hillsdale, NJ: Lawrence Erlbaum Associates, 1987, pp. 41-49.

Hewit J.R., and Burdess J.S., Fast Dynamic Decoupled Control for Robotics Using Active Force Control, Mechanism and Machine Theory, Vol. 16, No. 5, (1981) 535-542 .

Koenen A., Sanon A., Tribological and vibroacoustic behavior of a contact between rubber and glass (application to wiper blade), Tribol. Int. 40 (2007) 1484–1491.

Mat Darus I.Z., Tokhi M.O., Soft computing-based active vibration control of a flexible structure, Eng. Appl. Arti. Intel. 18 (2005) 93–114.

Mat Darus I.Z., Tokhi M.O., Parametric and non-parametric identification of a two dimensional flexible structure, J. Low Freq. Noise V. A., 25(2), (2006) 119-143.

Noshadi A., Mailah M., Zolfagharian A., Intelligent active force control of a 3-RRR parallel manipulator incorporating fuzzy resolved acceleration control, Appl. Math. Modell., 36(6), (2011) 2370-2383.

Sahooa H.K., Dashb P. K., Rath N.P., NARX model based nonlinear dynamic system identification using low complexity neural networks and robust H∞ filter, Applied Soft Computing 13 (2013) 3324–3334.

Shaheed M. H., Tokhi M.O., Dynamic modelling of a single-link of a flexible manipulator: parametric and non-parametric approaches, J. Robotica, 20 (2002) 93-109.

Silva V.V.R., Fleming P.J., Sugimoto J., Yokoyama R., Multiobjective optimization using variable complexity modelling for control system design, Appl. Soft Comput. 8 (2008) 392–401.

Srinivasan B., Prasad U.R., Rao N.J., Backpropagation through adjoins for the identification of non-linear dynamic systems using recurrent neural models, IEEE Trans. Neural Networ., 5(2) (1994) 213–228.

Toha S.F, Tokhi M.O., A hybrid control scheme for a twin rotor system with multi objective Genetic Algorithm, Proceeding of the 12th International Conference on Computer Modelling and Simulation, IEEE, 2010, pp 110-115.

Tokhi M.O., Zain M.Z.M., Hybrid learning control schemes with acceleration feedback of a flexible manipulator system, Proceedings of the Institution of Mechanical Engineers, Part I: Journal of Systems and Control Engineering 220 (4) (2006) 257–267.

Wang Z., Chau K.T., Control of chaotic vibration in automotive wiper systems, Chaos Soliton. Fract., 39, (2009) 168–181.

Warwick J. K., Kang Y. H., Mitchell R. J., Genetic least squares for system identification, Soft Computing, 3 (1999) 200-205.

Yanyan W., Jiana W., Zhifu Z., Design of Intelligent infrared Windscreen Wiper based on MCU, Procedia Engineering 15 (2011) 2484 – 2488.

Zadeh L.A., Outline of a new approach to the analysis of complex systems and decision processes, IEEE Trans. Syst. Man Cyb. 1 (1973) 28–44.

Zain M.Z. Md., Tokhi M.O., Mohamed Z., Hybrid learning control schemes with input shaping of a flexible manipulator system, Mechatronics 16 (2006) 209–219.

Zitzler E., Thiele L., Multiobjective evolutionary algorithms: a comparative case study and the strength Pareto approach. IEEE Trans. Evol. Comput., 3(4) (1999) 257–71.

Zolfagharian A., Zain M.Z. Md., Abu Bakar A.R., As'arry A., Suppressing Chatter Noise in Windscreen Wiper Operation Using a Robust Hybrid Controller, Int. Rev. Mech. Egr. (I.RE.M.E.), 6(3) (2012) 630-635.