ORIGINAL ARTICLE

lajss.org Latin American Journal of Solids and Structures

www.lajss.org

Experimental study on influence of output pressure characteristics of primer on internal ballistic performance of bullet

Yongjie Shang [a], Zhifang Wei [a]*, Fengxia Li [b], Yukun Shi [c], Jingguo Liang [a], Kebin Zhang [a]

[a] College of Mechatronics Engineering, North University of China, Taiyuan 030051, China. Email: syj__2000@163.com; wzhifang@nuc.edu.cn; 929356964@qq.com; 20230206@nuc.edu.cn
[b] Harbin Longjiang Special Equipment Co. Ltd. Harbin Songbei District 150029, China. Email: lfx_2025@163.com
[c] Shanxi Jiangyang Chemistry Industry Co. Ltd. No.18 Xiliu Road, Taiyuan 030041, China. Email: cptshi@163.com

* Corresponding author

https://doi.org/10.1590/1679-7825/e8712

Abstract

To investigate the effect of variations in priming output pressure characteristics on action time in chamber and maximum chamber pressure. A collaborative test method of primer output-internal ballistics was proposed. Designed primer output test device and internal ballistic performance test device. Aiming at the six factors, experimental study was carried out using the control variable method, respectively. Analyzing the contribution of each influencing factor to internal ballistic performance parameters using principal component regression analysis. Results indicate that shortened pressure start time and pressure peak time of primer output, reduced action time in chamber of the internal ballistics. And within a certain range, when pressure peak of primer output decreased, maximum chamber pressure decreased and action time in chamber of internal ballistics prolonged. High impact of dose of priming composition, damp of primer and ambient temperature on internal ballistic performance. Mapping relationship between output pressure characteristics of primer and internal ballistic performance of bullet was established.

Keywords

Small-caliber bullet, Pressure characteristics, Action time in chamber, Chamber pressure, Testing method

Graphical Abstract

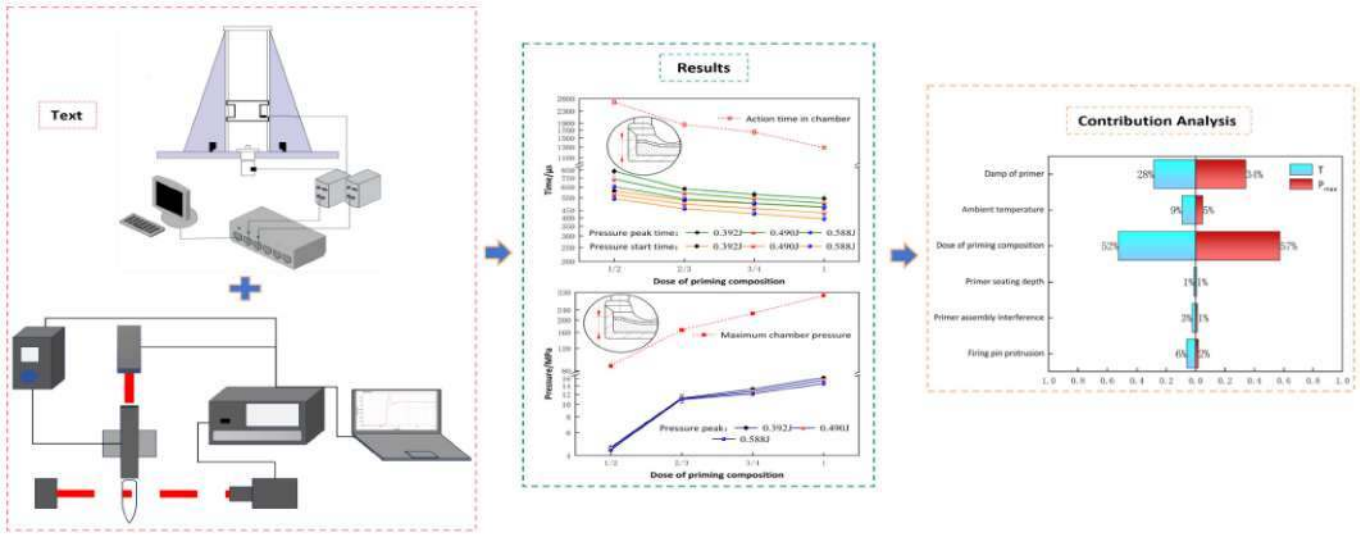

Received May 13, 2025. In revised form December 19, 2025. Accepted December 29, 2025. Available online December 31, 2025.
https://doi.org/10.1590/1679-7825/e8712

Latin American Journal of Solids and Structures. ISSN 1679-7825. Copyright © 2026. This is an Open Access article distributed under the terms of the Creative Commons Attribution license, which permits unrestricted use, distribution, and reproduction in any medium, provided the original work is properly cited

1 Introduction

The primer is one of the core components of the bullet. Its role is to ignite the propellant to push the projectile out of the chamber. Its output pressure performance directly affects the internal ballistic performance such as the action time in chamber, which is the time from the firing pin strikes the primer to the time of the bullet leaves the chamber (AMCP 706-107, 1963), and the maximum chamber pressure and the smooth firing of the bullet (GJB 3196.42A-2005k. (COSTIND) 2005). In the process of use, there are often faults (Fang Y. C et al. 2022), such as hangfire (Zhang S. X et al. 2025) caused by abnormal internal ballistic performance (AMCP 706-150, 1965), which is caused by the change of output pressure characteristics of the primer. However, the output of the primer pressure is limited by the change of multiple factors, such as the firing pin protrusion, interference amount of the primer assembly, the primer seating depth, the dose of priming composition, damp of primer and the ambient temperature. At present, the influence of these six factors on the output pressure characteristics of the primer is not clear (Abdullah, Ş et al. 2016), and the relationship between the output pressure characteristics of the primer, and the internal ballistic (Magazine, 2023) performance has not been established (Corner J. 1950).

Therefore, it is of great significance to carry out experimental research on the influence of the output pressure characteristics of the primer on the internal ballistic performance of the bullet.

Domestic and foreign scholars have carried out a series of studies on the influence of different factors on the internal ballistic performance of bullets. Ercan (Ercan D. 2015) found that the increase of the combustion temperature and the decrease of the particle size of the propellant increased the combustion rate, the pressure in chamber and the initial velocity of the projectile, and improved the ignition performance by studying the combustion characteristics of the bullet propellant. Zhou et al. (Zhou F et al. 2020) found that compared with the normal ballistic cycle, the occurrence of the explosion phenomenon will increase the initial velocity performance of projectile by about 7%, and the maximum chamber pressure by more than two times by studying the explosion phenomenon of propellant in the combustion light air gun. Dong et al. (Dong X. l et al. 2023) found that the mass ratio of the mixed charge propellant significantly affects the internal ballistic performance by establishing the internal ballistic two-phase flow model of the mixed charge. Adding granular propellant can increase the initial velocity of the bullet. Still, it also leads to an increase in the peak pressure of the rear chamber, an increase in ignition delay faults, and more serious particle accumulation. Chen (Chen A. and Yu Y. G. 2022) found that the particle distribution in the ignition process had a significant effect on the initial pressure wave generated, the propellant burning through the study of the particle distribution after the propellant was damaged, during the ignition process of the gun, thus affecting the stability of the interior ballistics. Ma (Ma Y. 2020) studied the influence of propellant gas state equation, burning rate equation and gas resistance on the combustion process in the chamber by modifying the classical interior ballistic model. It was found that the propellant charge, propellant temperature and propellant type significantly, affect the combustion rate and chamber pressure, thus prolonging or shortening the action time of the projectile in the chamber and solving the common delayed ignition fault. Zou et al. (Zou L et al. 2024) studied the wear law of the interior ballistics of the bullet along the axial direction by constructing the wear model of the small-caliber barrel. It was found that the length, diameter and inner wall coating of the barrel had an important influence on the wear of the barrel, which changed the interior ballistic performance and solved the problem of delayed ignition. Liu (Liu G. Q. 2024) studied the influence of barrel length on the interior ballistic performance of bullets through numerical simulation, and found that the barrel length determines the acceleration stroke of the projectile and the time of work of the gunpowder gas. The increase of the barrel length will prolong the action time of the projectile in the chamber, but it needs to be matched with the charge amount to avoid the weakening of the firing performance caused by the premature attenuation of the peak pressure in the chamber. Xu (Xu C. 2024) constructed a numerical calculation model of gun/ projectile interaction to study the influence of warhead structure parameters and material, projectile/propellant parameter errors on the in-chamber motion of projectiles, and found that the structural deviation of projectiles will indirectly affect the motion sequence of projectiles through the fluctuation of chamber pressure. Ding et al. (Ding S. Y et al. 2021) found that extreme temperature affects the combustion rate by changing the thermal conductivity characteristics of the barrel, and then changes the ballistic performance parameters of the bullet. Xu et al. (Xu H et al. 2022) established a numerical simulation model of bullet-gun interaction in the dynamic extrusion process of gun interior ballistics, and studied the influence of chamber offset on the dynamic response of embedded bullet in the extrusion process. It was found that by optimizing the structure of the cap, the deviation of the center of mass in the chamber can be greatly reduced, the deflection angle of the warhead and the maximum extrusion resistance can be improved, which in turn affects the initial velocity of the bullet and the maximum chamber pressure, and improves the shooting performance. Lu et al. (Lu Y et al. 2015) studied the influence of slope structure parameters on the ballistic squeezing process in the firearm by establishing a three-dimensional finite element model of the structural characteristics of the barrel and the bullet under different slope angles. They found that the optimal solution of the slope angle of the barrel to alleviate the slope force of the barrel, improve the firing fault, ensure the maximum muzzle velocity of the projectile,

and meet the design range of the maximum chamber pressure is 0.56°. Zhang et al. (Zhang Z. J et al. 1993) studied the influence of the combustion characteristics of the primer on the interior ballistic performance by using the self-developed comprehensive test system of the combustion characteristics of the primer, and established the relationship between the chamber pressure, the initial velocity and the combustion characteristics of the primer. Zhang et al. (Zhang S. X et al. 2024) built a small-caliber rifle ignition simulation test device, combined with a pressure sensor to collect the combustion pressure response of the primer at high speed (500 kHz), and used the pressure start-up time, peak time and amplitude as the ignition performance characterization. The LS-DYNA-ALE coupling model was used to reproduce the flame propagation and pressure growth process of 0-600 μ s. The error between calculation and experiment was less than 6%, and the quantitative evaluation of high-speed ignition of primer was realized. Based on the RSM surrogate model, the influence of the mean change of six parameters such as the protrusion of the firing pin and the locking clearance on the reliability is analyzed, and the sensitivity ranking is clear, which provides an experimental-simulation integration method for the precision measurement of the combustion and explosion of the primer and the reliability design of the firearm ignition. Wei et al. (Wei Z. F et al. 2023) constructed the mechanical-thermal-chemical coupling theoretical model, the elastoplastic response of the mixture containing primer, the pore collapse hot spot and the Lee-Tarver ignition growth model. Through quasi-static tensile and dynamic compression tests, the Johnson-Cook model of the primer cup and the ideal elastic-plastic model of the primer mixture were established, and the multi-mechanism coupling numerical model was established by ANSYS LS-DYNA software. The 3D Lagrange and ALE algorithm were used to obtain the characteristic parameters such as the output pressure of the primer and the crater of the fire cap. It is verified by the closed bomb test that the relative error between the simulation and the measured results is less than 15%, and the pit depth error is less than 5%, which provides an accurate and effective theoretical and numerical method for the measurement of the combustion and explosion of the bottom fire and the measurement of the high-speed ignition.

In summary, previous studies have focused on the influence of changes in propellant parameters and abnormal gun structure on internal ballistic performance, and there are few studies on the influence of pressure characteristics of primer output gas on internal ballistic performance. The traditional interior ballistic test system cannot realize the decomposition observation of firing ignition and interior ballistic response. Moreover, the mapping relationship between the output pressure characteristics of the primer and the internal ballistic performance parameters, such as the action time in chamber and the maximum chamber pressure has not been established due to the influence of the processing error of the firing pin and the assembly parameters.

Therefore, this paper takes a small-caliber bullet as the research object, and proposes a primer pressure output-internal ballistic collaborative test method from the perspective of the influence of primer output pressure characteristics on internal ballistic performance. Design a primer output test device and an internal ballistic performance test device. By separating the pressure output of the primer and the internal ballistic response, the control of the kinetic energy of the firing pin, the assembly parameters and the environmental conditions is realized by using the same working condition benchmark. The laser vibration measurement system and piezoelectric pressure sensor are used to monitor the timing of the movement of the firing pin and the change of the chamber pressure. Combined with the high-speed data acquisition system, the dynamic parameters such as the ignition time of the bottom fire, the peak gas pressure, the change of the chamber pressure and the action time in chamber are collected. Aiming at the factors such as the protrusion of the firing pin, the interference of the primer assembly, the primer seating depth, the dose of priming composition, the ambient temperature, and the damp or not of the primer, the control variable method was used to study and analyze the gas pressure response and the internal ballistic performance parameters of the primer output under the influence of a single factor. The mapping relationship between the primer output pressure and the internal ballistic performance of the bullet was established. Combined with the principal component regression analysis method, the contribution of each influencing factor to the internal ballistic performance parameters was studied. It provides some theoretical guidance for bullet design.

2 TEST SCHEME

In this paper, a test method of primer pressure output-interior ballistic synergy test is proposed. Taking a small-caliber bullet as the research object, based on the primer output test system and the interior ballistic performance test system, the same working condition is controlled to simulate the process of gun firing ignition and projectile interior ballistic action, and the primer output pressure test and interior ballistic performance test are carried out. The influence of parameters such as pressure start time, pressure peak time and pressure peak value of primer output on the characteristic quantities such as action time and maximum chamber pressure of interior ballistic output is explored. The overall schematic diagram of the influence of the output pressure characteristics of the primer on the internal ballistic performance test is shown in Figure 1.

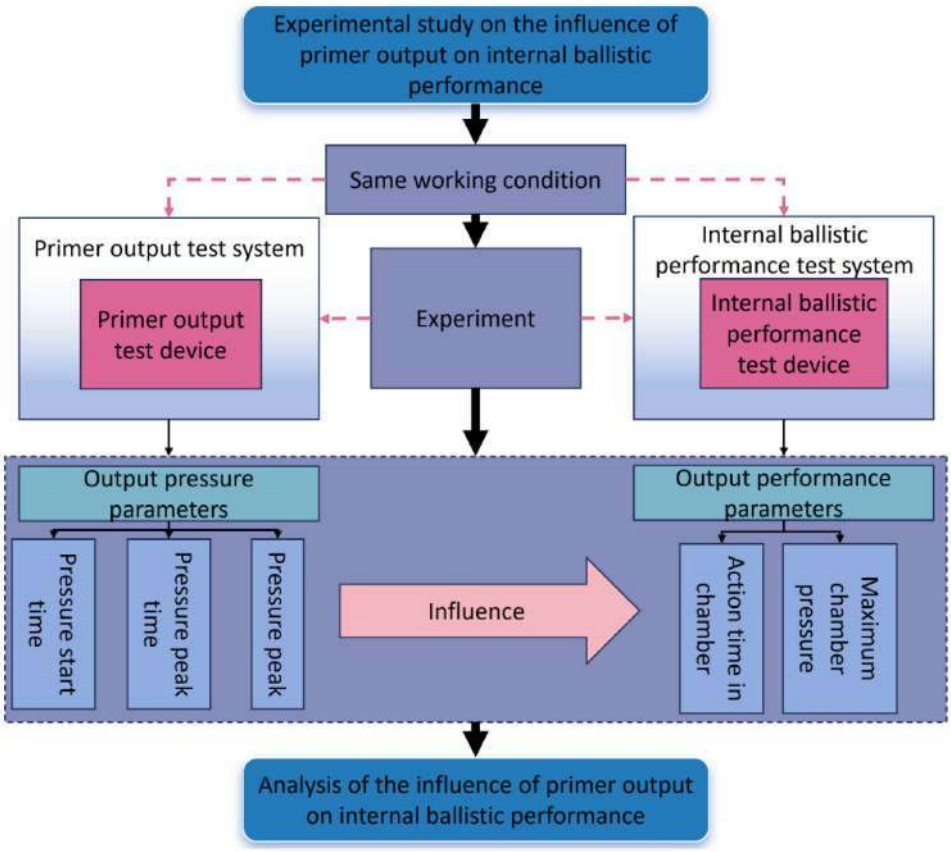

Figure 1. The overall schematic diagram of the influence of the output pressure characteristics of the primer on the internal ballistic performance test

2.1 Test device and test samples

2.1.1 Test device

Based on the principle of the ignition process of the firearm and the internal ballistic process of the bullet, the primer output test device and the internal ballistic performance test device are designed respectively. By controlling the same input condition, the bottom fire pressure output and the internal ballistic response process are decomposed. The former realizes the precise control of percussion energy and the quantitative characterization of primer output pressure performance by reproducing the firing-ignition process; the latter adopts a modular design strategy. On the basis of retaining the characteristics of the gun locking mechanism and the barrel (WJ 2127 - 1993. 1993), the dynamic pressure sensor is integrated to synchronously obtain the chamber pressure characteristics and the projectile motion characteristic parameters. It provides an experimental basis for establishing the mapping relationship between the output pressure of the primer, the maximum chamber pressure and the action time in the chamber.

1) Internal ballistic performance test device

The internal ballistic performance test device can simulate the real assembly relationship and actual working conditions of guns, and test the internal ballistic performance parameters such as gunpowder gas pressure and projectile motion characteristics. It consists of three modules: firing pin energy control, assembly adjustment and chamber pressure parameter acquisition: (1) The firing pin energy adjustment module uses a replaceable needle spring group to achieve accurate control of percussion energy (0.392 J, 0.490 J, 0.588 J), and the energy parameters are selected according to GJB 3196.13A-2005 ' primer impact sensitivity test ' ; (2) The primer assembly and adjustment module reproduces the assembly relationship of the small-caliber automatic rifle firing ignition system through a precision positioning fixture (positioning accuracy ± 0.01mm), in which the firing pin protrusion is 1.20 ± 0.05mm, and the primer assembly interference is the primer chamber diameter range of 5.42mm-5.47mm and the primer diameter range of 5.50mm-5.54mm ; (3) The chamber pressure test module integrates a piezoelectric pressure sensor (range 0-400 MPa) and a high-speed data acquisition system (GEN7i, sampling rate 0.02 MHz to 250 MHz per channel) to record the chamber pressure time domain characteristics in real time. The structure diagram of the internal ballistic performance test device is shown in Figure 2.

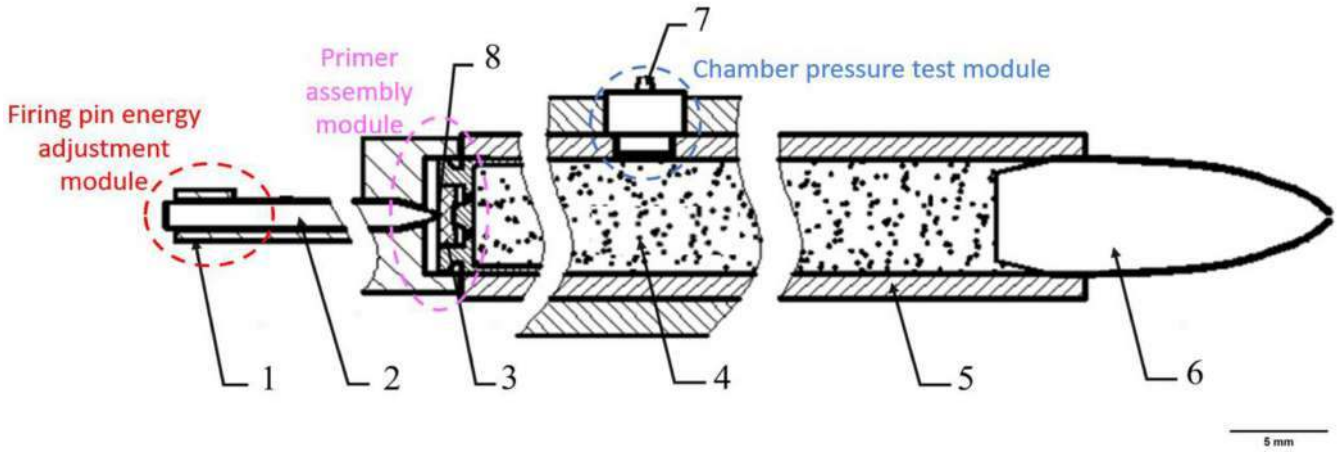

Figure 2. *Internal ballistic performance test device*. 1-Striker spring, 2-Firing pin, 3-Primer, 4-Gunpowder gas, 5-Gun-barrel, 6-Bullet, 7-Pressure measuring transducers, 8-Firing pin protrusion

2) Primer output test device

The primer output test device (Wei Z. F et al. 2024) is designed by Zhao (Zhao C. C et al. 2022). In the process of use, the test objects such as the firing pin and the cartridge case with primer are placed on the simulation test device through the pressure measuring tool to simulate the assembly relationship of the firing ignition system in the gun. By adjusting the falling height of the drop hammer and the mass of the drop hammer, the different working conditions of firing ignition in the gun are simulated, so that the firing pin hits the primer with different energy. It consists of an acceleration sensor, a drop hammer, a pressure measuring tooling and an outer frame of the device. The acceleration sensor is used to test the drop hammer velocity-time parameters. Drop hammer is used to simulate the hammer of the ignition system of firearms, which is used to hit the firing pin. The pressure measuring tooling is used to install and fix the firing pin and the cartridge case with bottom fire. The detachable tooling is installed in the tooling installation hole reserved on the working table of the test device. The firing pin is assembled in the firing pin hole on the simulated gun machine. The distance from the end face of the simulated gun machine is consistent with the actual forced outburst. As shown in Figure 3. The internal cavity volume of the pressure measuring tool is similar to the cavity volume of the shell after the warhead is installed, so that the output pressure of the ignition system obtained during the test is accurate, which can achieve the ideal test pressure and improve the test accuracy.

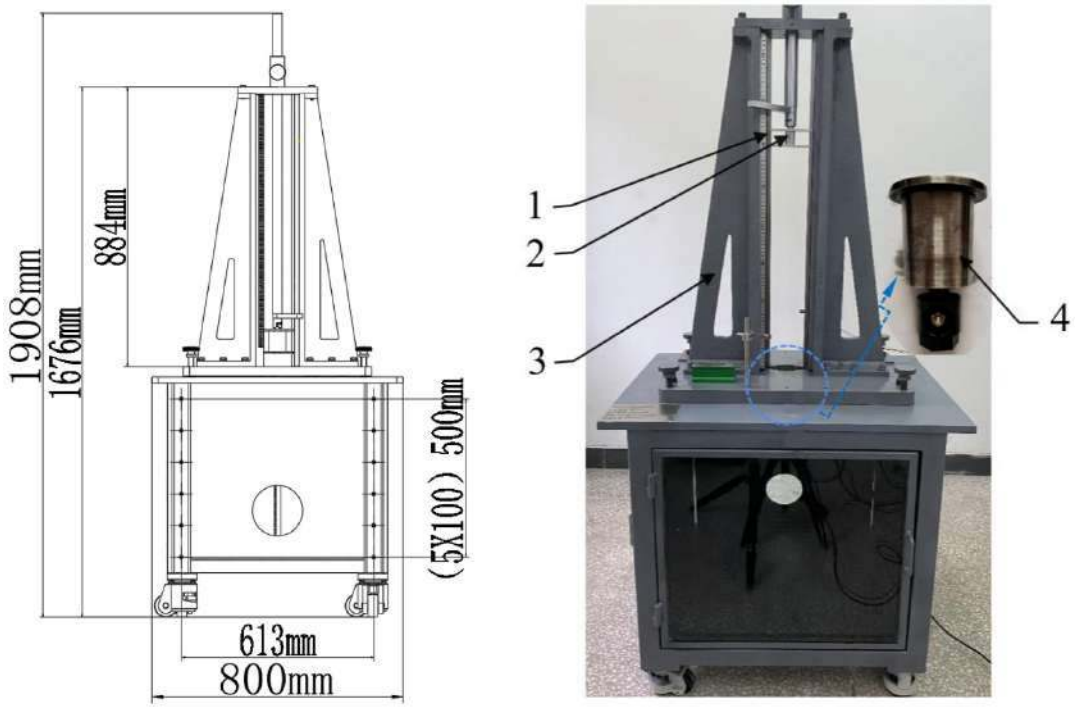

Figure 3. *Primer output test device*. 1- Acceleration sensor, 2-Drop hammer, 3-Outer frame of the device, 4-Pressure measuring tooling

The main test instrument parameters used in the article, as shown in the following Table 1.

Table 1. Main test instrument parameters

Instrument	Model	Instrument Parameters	
Charge amplifier	XY8102A	Number of channels	Single channel/station
		Input range	Charge±106PC
		Sensitivity	0.01-1000mVpC
Multi-channel data acquisition instrument	XY9204H	Number of channels	4 channels
		A / D digits	16 digits
		Input impedance	≥1MQ
Piezoelectric pressure sensor	Y1001-T/ Y1004E-T	Range	0-20Mpa/0-400Mpa
		Sensitivity	48.2PC/MPa 50mV/MPa
		Natural frequency	≥200kHz
		Piezoelectric materials	Quartz crystal
Synchronous triggering device	Homemade	AC Input	170V-264V
		DC Input	210V-370V
		Output	5V: 0.5A-5A/24V: 0A-1A
High-speed data acquisition	GEN7i	Number of channels	Up to 224 analog channels
		Sampling rate	0.02 MHz-250 MHz per channel
		Data transmission rate	Up to 350 MB/s

2.1.2 Test samples

The test object of the two devices is the same lot of primer, meeting the requirements for random sampling, and the appearance and assembly parameters of the primer are the same; the test samples are controlled by manual assembly, and the error of firing charge, the deviation of warhead mass and the variation range of pulling force are controlled within the tolerance range, which can effectively reduce the interference of each parameter on the test results (GJB 6228 - 2008k. 2008). The structural dimensions and assembly parameters of a small-caliber gun are shown in Table 2.

Table 2. The structural dimensions and assembly parameters of a small-caliber gun

Firing pin protrusion(mm)	Primer assembly interference(mm)	Primer seating depth(mm)	Dose of priming composition(g)
1.15-1.28mm	5.42mm-5.47mm (primer chamber diameters) 5.50mm-5.54mm (primer diameters)	0.09-0.17mm	0.035 g

1) Firing pin protrusion

The protrusion of the firing pin is that the firing pin is in the forced state of the hammer, that is, the tail end of the firing pin is flush with the plane behind the firing pin hole under the constraints of the hammer. The protrusion of the firing pin tip at the plane of the base socket of the bolt projectile, the protruding amount of the striking needle tip at the plane of the bottom socket of the gun (Yi S. Y. 2017). The firing pin protrusion ensures that the striking needle can reliably ignite the primer. As shown in Figure 4.

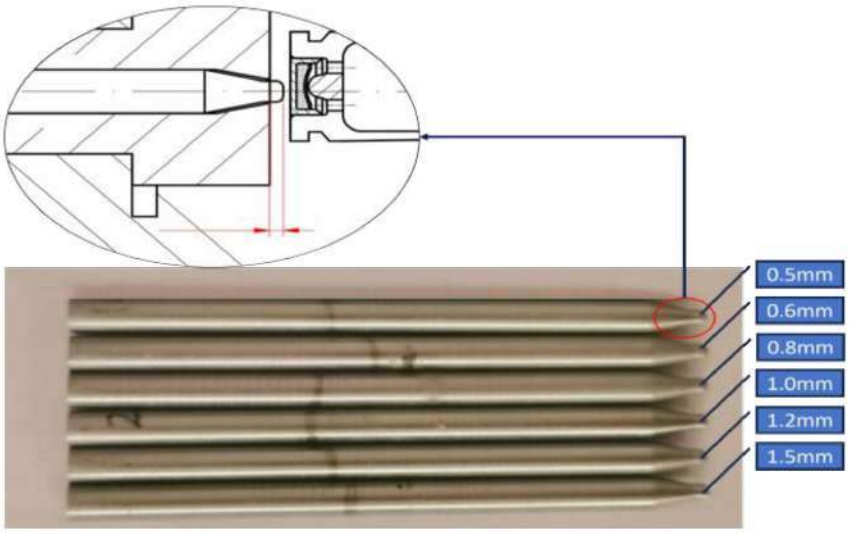

Figure 4. Firing pins of different protrusion

2) Primer assembly interference

According to Table 1, the cartridge cases with different primer chamber diameters and different primer diameters are selected and classified according to size. Three kinds of primer assembly interference schemes are obtained as shown in Table 3.

Table 3. Primer assembly interference of different sizes

Range of diameters	Min(mm)	STD(mm)	Max(mm)
Range of primer chamber diameters	5.46mm-5.47mm	5.42mm-5.47mm	5.42mm-5.43mm
Range of primer diameters	5.50mm-5.51mm	5.50mm-5.54mm	5.53mm-5.54mm

3) Primer seating depth

Due to the small size tolerance of the seating depth of the small-caliber bullet primer, in order to clearly observe the influence of the seating depth of the primer on the pressure output performance of the primer, through the customized primer mold, from the left to the right No.1 to No.6 pressing molds, six specimens of primer seating depth of 0.081 mm, 0.144 mm, 0.157 mm, 0.202 mm, 0.236 mm and 0.239 mm were formed respectively, as shown in Figure 5.



Figure 5. Specimens with different primer seating depth

4) Dose of priming composition

Customized primers with 1/2, 2/3 and 3/4 priming composition, and assembling these primers with bullets.

5) Ambient temperature

To simulate the use of firearms at different ambient temperatures, high and low temperature tests were carried out in the experiment (GJB 3484-98. 1998). Before the high temperature test, the test bullets, firing pins and manometer devices were taken out of the test after being kept at + 50°C for 2 h in the high temperature incubator. Before carrying out the low temperature test, the test bullets, firing pins and manometer devices were kept in the low temperature incubator at-49°C for 2 h, and then the test was taken out.

6) Damp of primer

The primer was taken out after 288 h (12 days) in a humid environment and assembled with the tested bullets.

2.2 Experimental test principle

In engineering, the closed bomb test principle is often used to test the output pressure of the primer, and the pressure-time curve is obtained. The interior ballistic performance test system uses non-contact laser vibration measurement technology to accurately extract the motion characteristics of the firing pin. The laser-screen and the pressure sensor simultaneously obtain the bullet's exit time and chamber pressure response characteristics.

2.2.1 Principle of doppler laser vibration measurement

The motion characteristics of the firing pin are measured by the Doppler laser vibrometer system (Peng X. 2018), and the basic principle is the Doppler effect. The laser head on the photodetector emits a laser with a fixed frequency of f_0 to the surface of the firing pin. At this time, the movement speed of the firing pin is v. According to Formula (1), the frequency of the reflected light on the surface of the firing pin will become f_1.

$$f_1 = f_0\left(1+\frac{v\cos\theta_1}{c}\right) \tag{1}$$

The reflected laser is captured by the photodetector, and the laser frequency received by the photodetector is f_2.

$$f_2 = f_1\left(1+\frac{v\cos\theta_2}{c}\right) \tag{2}$$

The doppler frequency shift is Δf.

$$\Delta f = f_2 - f_0 = f_0\left(1+\frac{v\cos\theta_1}{c}\right)\left(1+\frac{v\cos\theta_2}{c}\right) - f_0 \tag{3}$$

Under the condition of normal incidence, $\theta_1 = \theta_2 = 0$, then there is

$$\Delta f = \frac{2f_0 v}{c} \tag{4}$$

Where c is the speed of light, the visible Doppler frequency shift is linearly related to the velocity of the object.

Therefore, the Doppler frequency shift of the measuring point on the surface of the firing pin is measured, and the parameters such as velocity, acceleration and displacement of the firing pin are obtained. The time when the velocity of the firing pin changes from zero is the time when the firing pin starts to move, and the time when the acceleration of the firing pin changes from zero is the time when the firing pin hits the primer.

2.2.2 Principle of laser-screen test

In order to determine the action time of the projectile in the bore, it is necessary to accurately measure the time of the bullet out of the bore. At present, the method of testing the ejecting time of bullet in engineering mainly depends on the muzzle sensor. The main detection methods include muzzle coil, net target, foil target, sky screen target, laser target and Doppler radar. Among them, the mesh target and foil target are contact target measurement technology, which requires that the projectile must pass through the target, so it is not suitable for repeated tests; the muzzle coil, sky screen target and Doppler radar all adopt non-contact target measurement technology, but they are mainly used in the test of medium and large caliber barrel weapons, which is difficult to meet the needs of small caliber gun test.

Comprehensive comparison of various target technologies, this paper finally selected the laser-screen as a means to test the time of the bullet out of the chamber.

The laser target (Hou J. l et al. 2015) is mainly composed of a laser emitter and a laser receiver. When used, the laser target is arranged at the muzzle of the barrel. The laser emitter emits the laser beam and the laser receiver is responsible for receiving it. When the bullet exits the chamber, the laser beam is interrupted, resulting in an electrical signal. The signal is amplified by the signal amplifier, recorded and transmitted to the computer through the high-speed data acquisition system, and then the accurate measurement of the projectile exit time is realized.

2.2.3 Test principle of action time in chamber

The starting time of the movement of the firing pin is the zero point of time, and the time when the bullet leaves the chamber is the end point of time.

The calculation formula of the average value of the action time (GJB 3196. 42A-2005k. 2005) in the bore of the test projectile is

$$\overline{T} = \overline{t_2} - \overline{t_1} \tag{5}$$

In the formula, $\overline{T}$ is the average value of the action time in each group of bullets, $\overline{t_2}$ is the average value of the whole time from the release of the firing pin to the exit of the bullet, and $\overline{t_1}$ is the average value of the time from the release of the firing pin to the impact of the primer. The units are all microseconds (μ s);

2.2.4 Principle of pressure test

After the primer is fired, the priming composition burns to produce flame gas, which is transmitted to the cartridge case through the fire hole. The gas pressure response is an important characterization of primer performance.

The principle of the closed bomb is used in the pressure test of the action time test in the bore of the gun. The pressure waveform of the output gas of the primer pressure in the closed space is tested, and the pressure-time curve (p-t curve) is obtained. From the p-t curve, the important characterizations of the pressure output performance of the gun primer, such as the pressure start time, the pressure peak time and the pressure peak, are obtained.

The gas pressure in the closed bomb is proportional to the temperature and the number of gas moles. The maximum pressure generated by the explosion of the explosive in the primer can be calculated according to the following relationship:

$$P_1 = \frac{T_1 \times m_1}{T_0 \times m_0} \times P_0 \tag{6}$$

2.3 Test system and test method

In order to explore the influence mechanism of the output pressure characteristics of the primer on the interior ballistic performance, the following test systems and methods were used for testing.

1) Primer output test system and method

The primer output test system (Zhao C. C et al. 2022) is composed of test object, primer output test device, test sample, piezoelectric pressure sensor, charge amplifier, multi-channel data acquisition instrument and other equipment. During the test, the pressure shell with primer is installed in the pressure measuring tooling, and the pressure measuring tooling is placed on the primer output test device. The falling height of the drop hammer and the quality of the drop hammer are adjusted to control the input energy of the primer. The acceleration sensor installed on the drop hammer is used to identify the moment of the drop hammer striking the needle, and the start signal is sent to the multi-channel data acquisition instrument. The pressure data are converted, filtered, amplified, normalized and modulated by piezoelectric pressure sensor and charge amplifier, and then collected and finally transmitted to the computer to obtain the p-t curve of the output pressure of the primer. The data of pressure start time, pressure peak time and pressure peak arrival time are extracted. The pressure test system is shown in Figure 6. The pressure sensor used in the pressure test system has a range of 0~20Mpa and a sensitivity of 48.2PC / MPa.

2) Internal ballistic performance test system and method

The internal ballistic performance test system is composed of test object, interior ballistic performance test device, test sample, Doppler laser vibration measurement system, electric pressure measurement device, laser target, high-speed data acquisition system and other equipment. Before the start of the test, the test object is loaded into the internal ballistic performance test device and the device is fixed on the test platform. During the test, the firing pin starts to move and sends

out the starting signal. The Doppler laser vibration measurement system is used to monitor the movement characteristics of the firing pin. After the firing pin impacts the primer, the primer ignites the propellant and produces the gunpowder gas. The pressure sensor detects the pressure change of the gunpowder gas in the chamber, which is converted into the corresponding electrical signal through the charge amplifier and input to the high-speed data acquisition system by the electric pressure measuring device. When the projectile is out of the chamber and passes through the laser target, the corresponding data signal is converted, filtered, amplified, normalized and modulated, and recorded, and finally transmitted to the computer-controlled high-speed data acquisition system; All kinds of data signals are input into the computer by high-speed data acquisition system and processed comprehensively, and then the corresponding image change curves are output. By analyzing these change curves, the corresponding data such as the action time in chamber and the maximum chamber pressure of the bullet are obtained. The interior ballistic performance test system is shown in Figure 7.

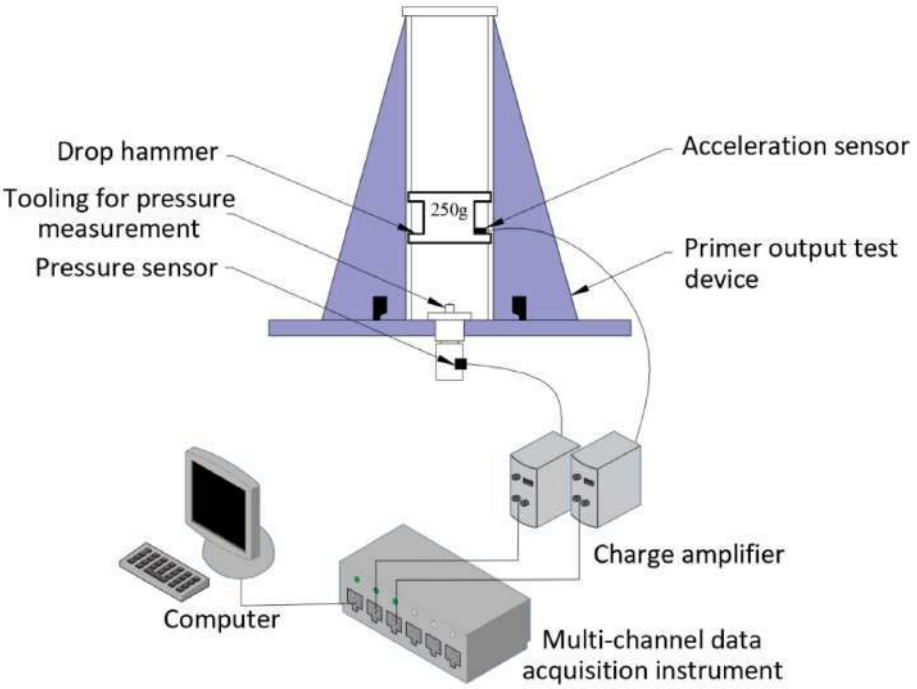

Figure 6. The primer output test system

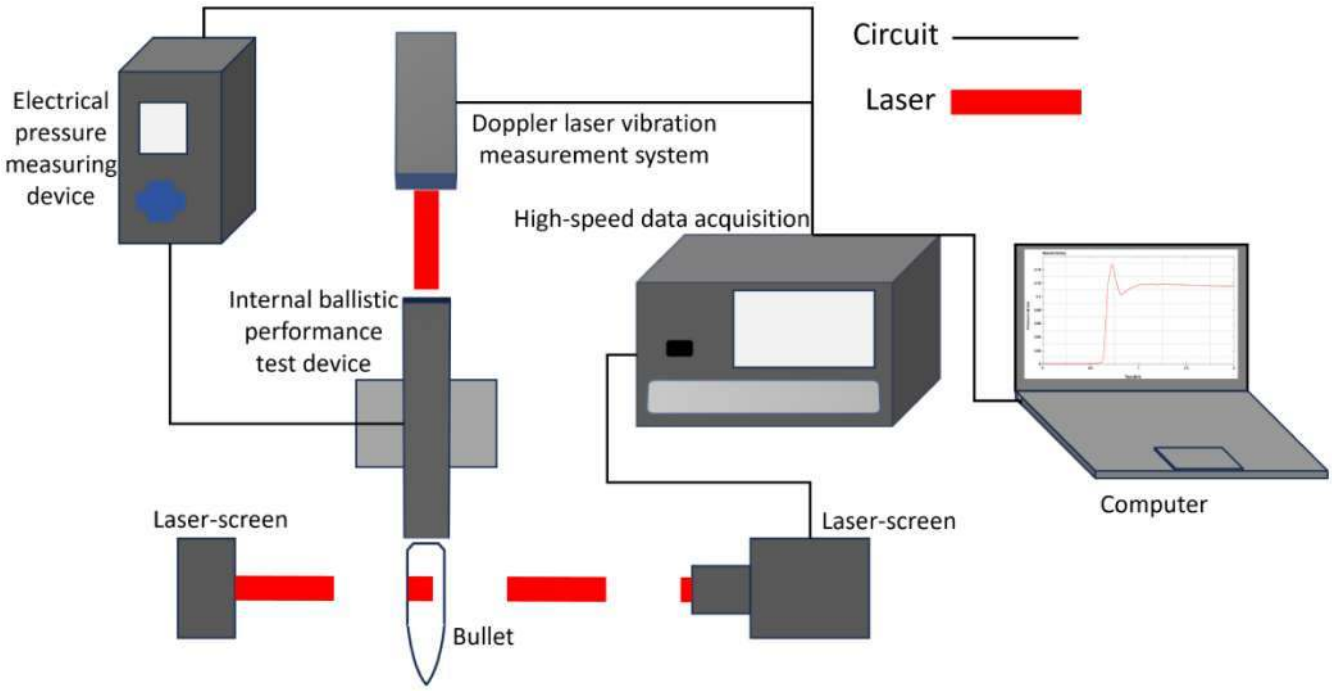

Figure 7. The internal ballistic performance test system

2.4 Test data acquisition and processing

Using the above test device and system, multiple firing tests were carried out under the conditions of 1.2mm firing pin protrusion, standard primer assembly interference, primer seating depth of 0.144mm, normal dose of priming composition, room temperature of 25°C and undamped primer. In the test, the velocity and acceleration-time curves of the firing pin were recorded by the laser vibration measurement system. When the firing pin hits the primer, the pressure begins to generate. Combined with the pressure sensor to monitor the evolution process of the chamber pressure, the laser target collects the time when the projectile exits the chamber, and the key performance parameters such as the pressure start time, the pressure peak time, the pressure peak, the action time in chamber and the maximum chamber pressure of the primer output are obtained, as shown in Figure 8 and Figure 9. The time when the firing pin strikes the primer is the time zero point of the pressure characteristic curve in Figure 9.

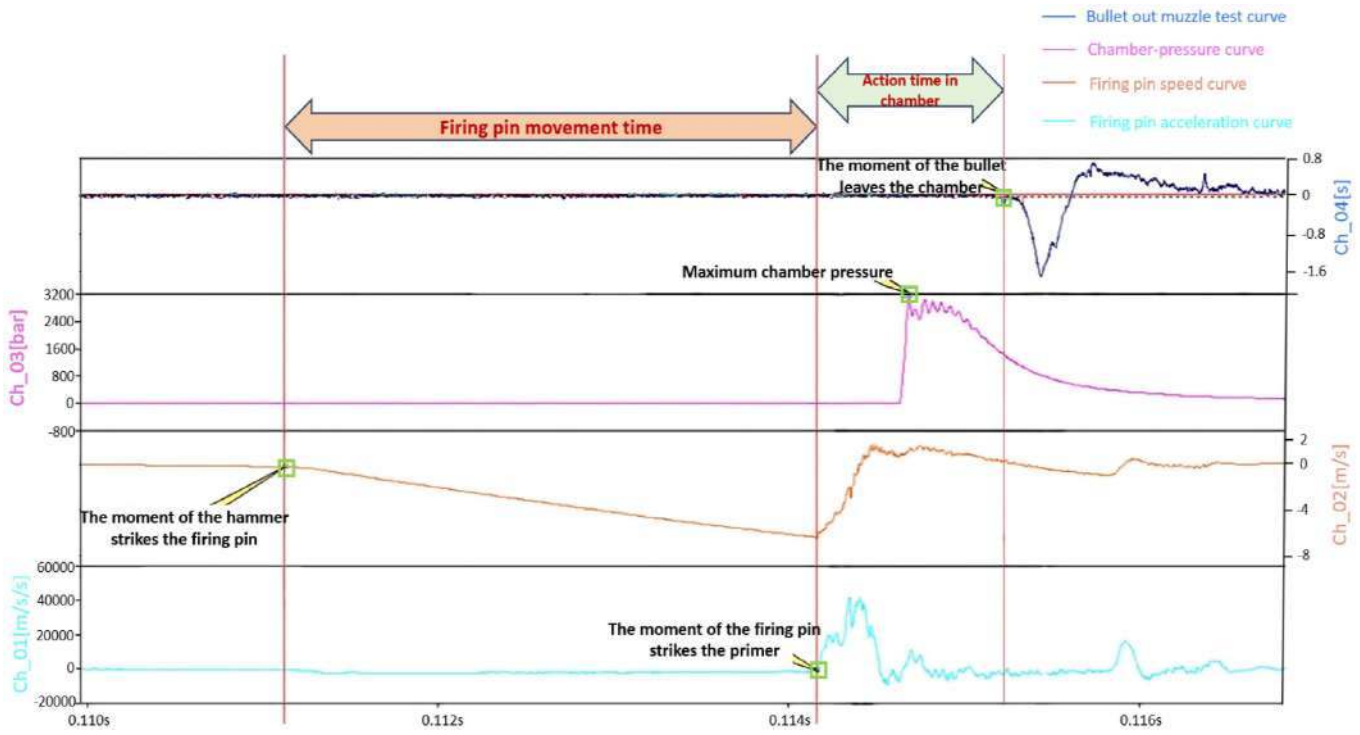

Figure 8. Variation curve of performance parameters

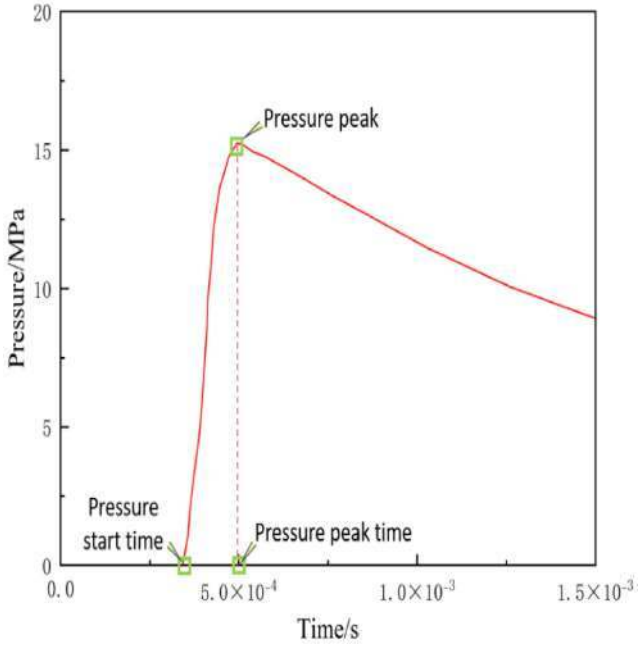

Figure 9. Pressure characteristic curve of primer output

Curve 8 of the performance parameters obtained from the test shows that the hammer hits the firing pin at about 0.111 s, and the firing pin begins to move at a certain acceleration. At 0.1141 s, the firing pin began to impact the primer, and the pressure response of the primer's output gas was obtained. Combined with figure 9, the pressure began to produce at about 0.1143 s, which was the pressure start time; at about 0.1145 s, the output gas pressure reaches the maximum value, that is, the pressure peak value, and the time for the pressure to reach the maximum value is the pressure peak time; at about 0.1146 s, the primer ignites the propellant, the chamber pressure begins to produce, and the maximum chamber pressure appears at about 0.11465 s; at 0.1150 s, the bullet muzzle test curve changes, indicating that the bullet is out of the barrel. The time from the hammer strikes the firing pin to the time of the firing pin strikes the primer is called the movement time of the firing pin. The time from the firing pin strikes the primer to the time of the bullet leaves the chamber is called the action time in the chamber, and the sum of the movement time of the firing pin and the action time in the chamber is called the firing time of the bullet.

A total of 10 tests were carried out, and the results are shown in Table 4 and Table 5.

Table 4. Internal ballistic performance parameter test results

Test number	firing pin movement time(μs)	Action time of bullet in chamber(μs)	The firing time of the bullet(μs)	Maximum chamber pressure (MPa)
Test 1	2904	1291	4202	301.39
Test 2	2916	1309	4260	312.64
Test 3	2944	1292	4239	317.19
Test 4	2886	1311	4201	314.99
Test 5	2982	1330	4315	312.71
Test 6	3000	1250	4260	327.39
Test 7	2988	1219	4207	312.22
Test 8	2906	1321	4229	305.39
Test 9	2984	1288	4273	314.06
Test 10	2950	1296	4254	298.56
average	2946	1291	4244	311.65
σ	41.24	33.41	36.10	8.26
95% CI	2916.50– 2975.50	1266.80 – 1314.60	4218.18 – 4269.82	305.75 – 317.56

According to the analysis of Table 4, the average movement time of the firing pin (Ou X. B et al. 1995) is 2946μs, the average action time in chamber of the bullet is 1291μs, accounting for 30.4% of the firing time of the bullet, the average firing time of the bullet is 4244μs, and the average maximum chamber pressure is 311.65 MPa.

Table 5. Average of priming pressure output test results

Percussion energy(J)	Pressure start time (μs)	Pressure peak time (μs)	Pressure peak(MPa)
Average value of 0.392	472	584	16.6021
σ	5.132	8.000	0.0010
95% CI	459.586—485.081	564.127—603.873	16.6000—16.6050
Average value of 0.490	432	504	15.4531
σ	2.082	4.509	0.0002
95% CI	427.162—437.504	493.132—515.535	15.4530—15.4534
Average value of 0.588	394	474	18.2129
σ	5.859	4.000	0.0004
95% CI	379.778—408.889	465.063—484.937	18.2120—18.2140

It can be seen from Table 5 that when the percussion energy is 0.392 J, the average pressure start time is 472 μs, the average pressure peak time is 584 μs, and the average pressure peak is 16.6021 MPa. Similarly, it can be seen that when the firing energy is 0.490 J and 0.588 J, the average value of each pressure output test result is.

3 THE TEST Results AND ANALYSIS OF THE INFLUENCE OF THE OUTPUT PRESSURE CHARACTERISTICS OF THE PRIMER ON THE INTERIOR BALLISTICS

The influence of the change of the pressure output characteristics of the primer on the internal ballistic performance is explored (GJB 736. 16A–2019. 2019). Based on the primer output test device and the internal ballistic performance test device, the control variable method is used to test 60 rounds of each working condition for the influencing factors (Yu Y. B et al. 2024) such as the amount of firing pin protrusion, the amount of primer assembly interference, the depth of primer seating, the amount of priming composition, the ambient temperature, and the damp of the primer. The primer output pressure characteristics (Li B et al. 2023) and the internal ballistic performance parameters are measured respectively, and the average value is calculated. The influence of the gas pressure response of the primer output on the interior ballistic performance under the influence of different factors is analyzed, and the mapping relationship between the primer pressure output and the internal ballistic performance of the bullet is established.

3.1 Experiment on the influence of the output pressure characteristics of the primer on the interior ballistic performance under the change of the firing pin protrusion

On the premise of not changing other parameters, the protrusion of the firing pin is gradually reduced until 100% ignition cannot be ensured. Through experiments, the influence of different firing pin protrusions on the pressure start time, pressure peak time, pressure peak value of the primer output, as well as the action time in chamber and maximum chamber pressure of the internal ballistic performance is obtained as shown in Figure 10.

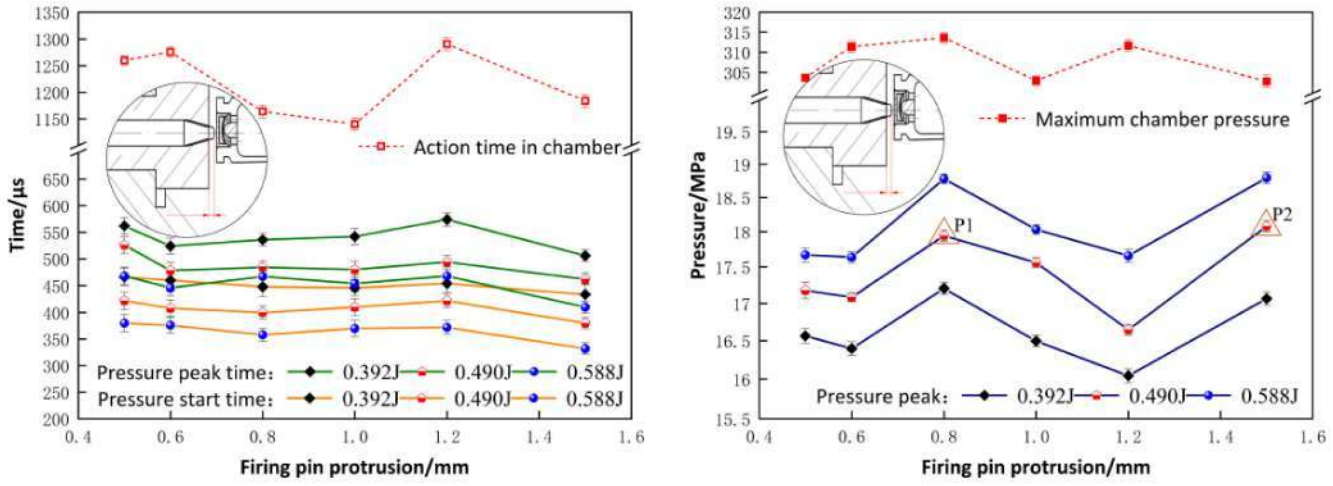

a The influence of pressure peak time and pressure start time on the action time in chamber under the change of firing pin protrusion

b The influence of pressure peak on the maximum chamber pressure under the change of firing pin protrusion

Figure 10. Law of influence of primer output pressure characteristics on internal ballistic performance under variation of firing pin protrusions

It can be seen from Figure 10 (a) that when the firing pin protrusion increases in the range of 0.5mm ~1.0mm, the effective displacement of the firing pin following hammer impact increases, intensifying deformation of the primer shell. This heightens firing energy, accelerating the formation of the powder's hot spot and thereby facilitating the ignition reaction of the firing agent, the pressure start time and pressure peak time of the primer output generally show an downward trend. With the decrease of pressure start time and pressure peak time, the action time in the chamber reduce. When the firing pin protrusion increases in the range of 1.0mm ~1.5mm, upon reaching a certain level, the effective displacement stroke diminishes, resulting in a reduction in firing energy, the action time in chamber increases with the increase of pressure start time and pressure peak time.

It can be seen from Figure 10 (b) that with the increase of the firing pin protrusion, the peak pressure first increases in stages, then decreases, and finally shows an upward trend. During this period, the maximum chamber pressure fluctuates, but it remains basically unchanged from the perspective of the whole change process. When the firing energy is 0.490 J, the pressure start time is shortened from 422 μs to 380 μs, the pressure peak time is decreased from 525 μs to 470 μs, and the action time in chamber is shortened from 1260 μs to 1184 μs when the firing pin protrusion increases from 0.5 mm to 1.5 mm, while the pressure peak shows a bimodal response (P1 = 17.9431 MPa, P2 = 18.0791 MPa).

3.2 Experiment on the influence of the output pressure characteristics of the primer on the interior ballistic performance under the interference of the primer assembly

On the premise of not changing other parameters, the above three kinds of primer assembly interference schemes are adopted. Through the experiment, the influence of different primer assembly interference on the pressure start time, pressure peak time, pressure peak value of primer output, as well as the action time in chamber and maximum chamber pressure of internal ballistic performance is obtained as shown in Figure 11.

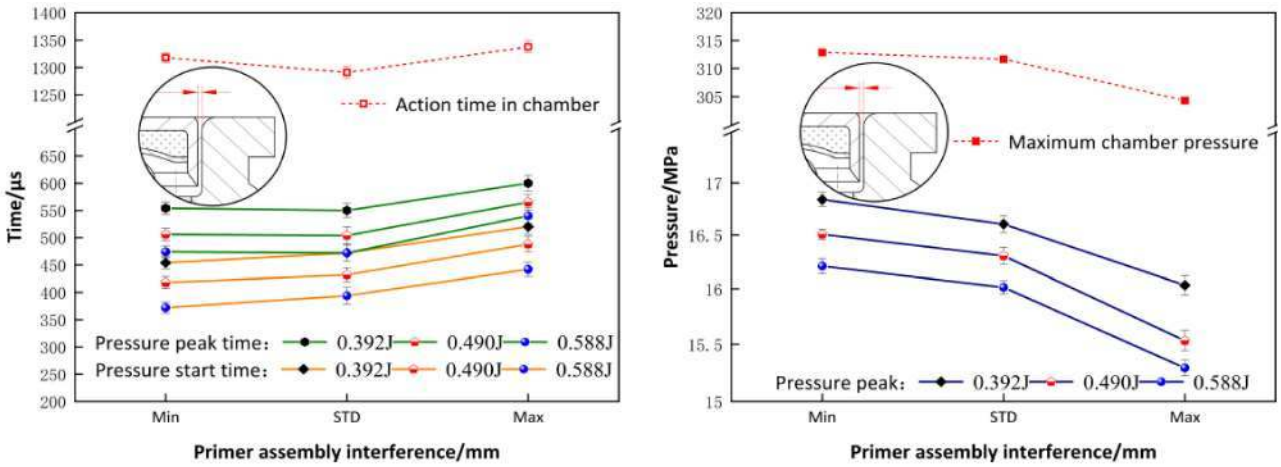

a The influence of pressure peak time and pressure start time on the action time in chamber under the change of primer assembly overfill

b The influence law of pressure peak on maximum chamber pressure under the change of primer assembly overfill

Figure 11. : Law of influence of primer output pressure characteristics on internal ballistic performance under variations of primer assembly overfill

It can be seen from Figure 11 (a) and (b) that with the increase of the interference amount of the primer assembly, the radial pressure of the primer shell increases, and the energy required for the firing pin to strike the primer increases, which is not conducive to the ignition reaction of the firing agent, the pressure start time and the pressure peak time of the primer output increase, which leads to an increase of the action time in the chamber. The peak pressure shows a decreasing trend, and the maximum chamber pressure also gradually decreases. If the firing energy is 0.490 J, when the interference of primer assembly increases from the minimum to the maximum, the pressure start time increases from 418 μs to 488 μs, the pressure peak time increases from 506 μs to 565 μs, and the action time in chamber increases from 1318 μs to 1338 μs. The peak pressure decreased from 16.5062 MPa to 15.5329 MPa, and the maximum chamber pressure decreased from 312.86 MPa to 304.34 MPa.

3.3 Experiment on the influence of the output pressure characteristics of the primer on the interior ballistic performance under the depth of the primer seating

Under the premise of keeping other parameters unchanged, only the bottom fire seating depth is changed. The influence of different bottom fire loading depths on the pressure start time, pressure peak time, pressure peak value of the primer output, as well as the action time in chamber and maximum chamber pressure of the interior ballistic performance are obtained through experiments, as shown in Figure 12.

It can be seen from Figure 12 (a) and (b) that with the increase of the seating depth of the primer, the distance between the fire table and the priming composition surface decreases, which aggravates the deformation of the primer shell required for the fire table to pierce the priming composition when the firing pin strikes the primer, and reduces the loss when the firing energy is converted into the ignition energy, which is beneficial to the ignition reaction of the firing agent, the pressure start time and pressure peak time of the primer output are advanced, and there is almost no effect on the action time in chamber. The pressure peak shows variance characteristics, and the maximum chamber pressure has a positive correlation with the pressure peak, showing an overall upward trend. If the firing energy is 0.490 J, when the seating depth of primer increases from 0.081 mm to 0.202 mm, the pressure start time decreases from 462 μs to 404 μs, the pressure peak time decreases by 7.9%, the pressure peak increases from 15.6837 MPa to 16.6378 MPa, and the maximum chamber pressure increases from 310.88 MPa to 319.55 MPa.

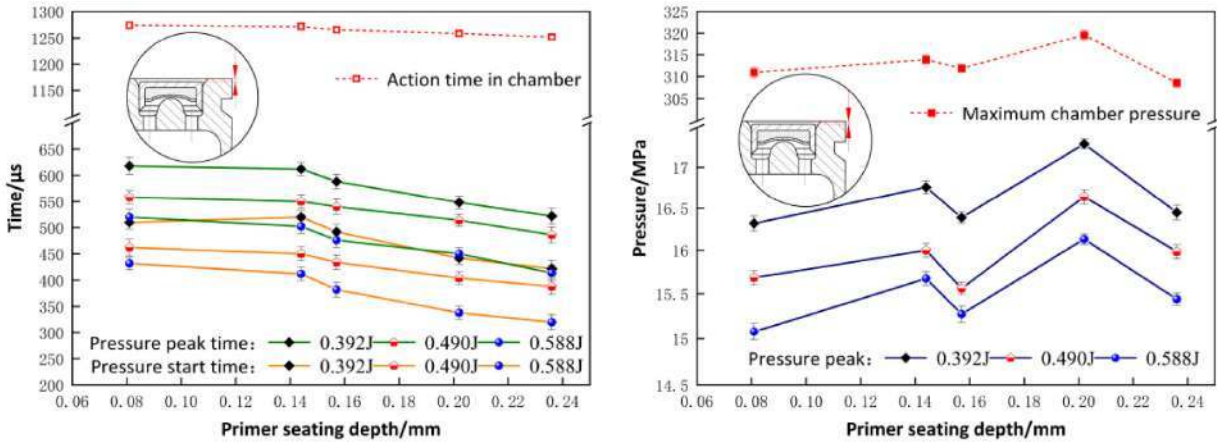

a The influence of pressure peak time and pressure start time on the action time in chamber under the change of primer loading depth

b The influence of pressure peak on the maximum chamber pressure under the change of bottom fire loading depth

Figure 12. Law of influence of primer output pressure characteristics on internal ballistic performance under variations of primer loading depths

3.4 Experiment on the influence of the output pressure characteristics of the primer on the interior ballistic performance under the dose of priming composition

On the premise of not changing other parameters, the amount of priming composition is gradually reduced to 3/4, 2/3 and 1/2. Through experiments, the influence of different priming composition on the pressure start time, pressure peak time, pressure peak value of the primer output, as well as the action time in chamber and maximum chamber pressure of the internal ballistic performance is obtained as shown in Figure 13.

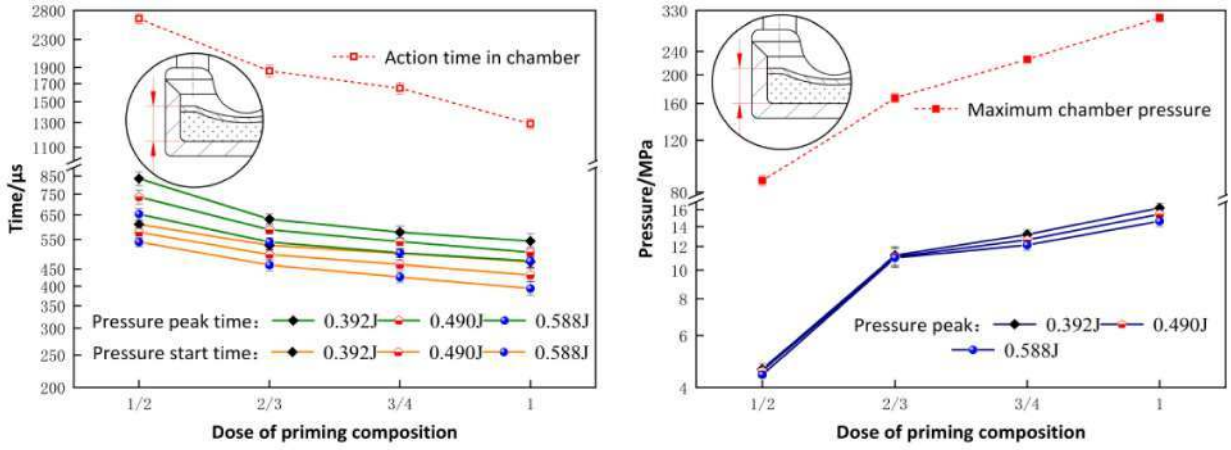

a The influence of pressure peak time and pressure start time on the action time in chamber under the change of priming composition

b The influence of pressure peak on the maximum chamber pressure under the change of priming composition

Figure 13. Law of influence of primer output pressure characteristics on internal ballistic performance under varying priming composition

According to Figure 13 (a) and (b), with the decrease of the priming composition, the pressure start time and pressure peak time of the primer output are significantly delayed, and the pressure peak is significantly reduced, resulting in a significant decrease in the maximum chamber pressure. The decrease in chamber pressure leads to a decrease in the velocity of the projectile in the chamber, thus prolonging the action time in chamber. If the firing energy is 0.490 J, when the priming composition is reduced from normal to 1/2, the pressure start time is prolonged from 432 μs to 578 μs, the pressure peak time is increased from 504 μs to 736 μs, and the average action time in chamber is increased by 111.6%.

The peak pressure decreased from 15.4531 MPa to 4.5542 MPa. The average value of the maximum chamber pressure is reduced by 71.9%.

3.5 Experiment on the influence of the output pressure characteristics of the primer on the interior ballistic performance under the ambient temperature

Without changing other parameters, only the ambient temperature is changed. Through experiments, the influence of different ambient temperatures on the pressure start time, pressure peak time, pressure peak value of the primer output, as well as the action time in chamber and maximum chamber pressure of the internal ballistic performance is obtained as shown in Figure 14.

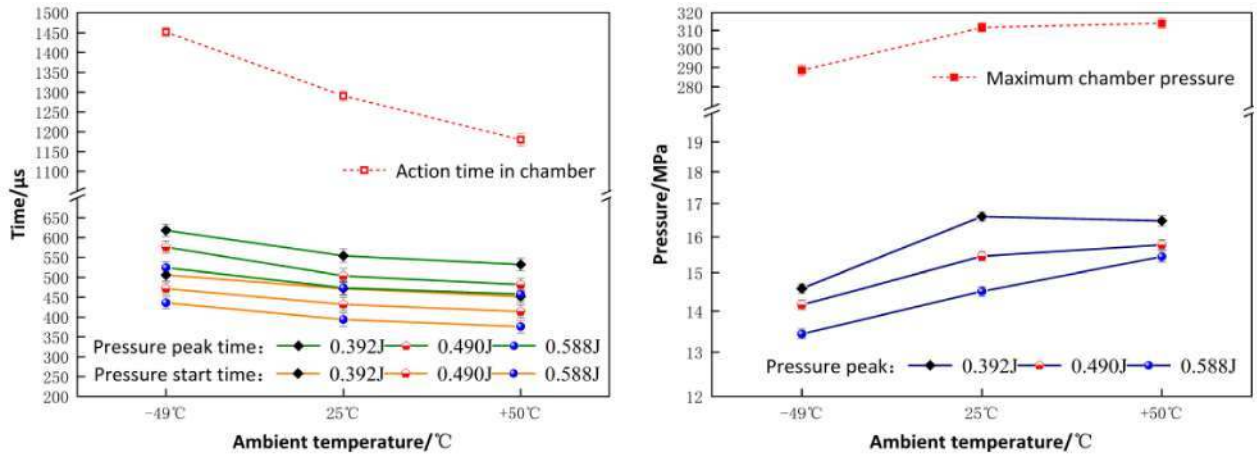

a The influence of pressure peak time and pressure start time on the action time in chamber under the change of ambient temperature

b The influence of pressure peak on the maximum chamber pressure under the change of ambient temperature

Figure 14. Law of influence of primer output pressure characteristics on internal ballistic performance under ambient temperature change

From Figure 14 (a) and (b), it can be seen that under the same percussion energy conditions, the higher the test ambient temperature, the earlier the pressure start time and pressure peak time of the primer output, which is beneficial to the ignition reaction of the firing agent, and the shorter the action time in chamber will be affected by the advance of the pressure time. When the temperature rises from 25°C to + 50°C, the action time in chamber decreases significantly, and the peak pressure and the maximum chamber pressure do not change significantly. When the temperature is reduced from 25°C to-49°C, the low temperature environment reduces the combustion speed of the priming composition, the average value of the action time in chamber increases by 10%, the peak pressure decreases obviously, the average value of the maximum chamber pressure decreases by 15%, and the bullet firing time is prolonged. If the firing energy is 0.490 J, when the ambient temperature changes from low temperature-49°C to high temperature + 50°C, the pressure start time is shortened from 472 μs to 414 μs, the pressure peak time is reduced from 576 μs to 482 μs, and the pressure peak increases from 14.1623 MPa to 15.7736 MPa.

3.6 Experiment on the influence of the output pressure characteristics of the primer on the interior ballistic performance under the damp of primer

Without changing other parameters, only the degree of moisture of the primer is changed. Through experiments, the influence of whether the damp or not of the primer on the pressure start time, pressure peak time, pressure peak value of the primer output, as well as the action time in chamber and maximum chamber pressure of the internal ballistic performance is obtained as shown in Figure 15.

It can be seen from Figure 15 (a) and (b) that the pressure start time and pressure peak time of the primer output lag after the primer is dampened. The humidity in the priming composition increases, which reduces the combustion speed of the priming composition and is not conducive to the ignition reaction of the firing agent. The moisture reduces the combustion speed of the priming composition, and the action time in chamber will be significantly prolonged, which is about 132% of that in the undamped state. At the same time, after the primer is dampened, the peak pressure of the output is reduced, and the maximum chamber pressure is significantly reduced. If the firing energy is 0.490 J, the peak pressure is reduced from 15.4531 MPa to 11.3461 MPa, and the maximum chamber pressure is about 71% of the undamped state.

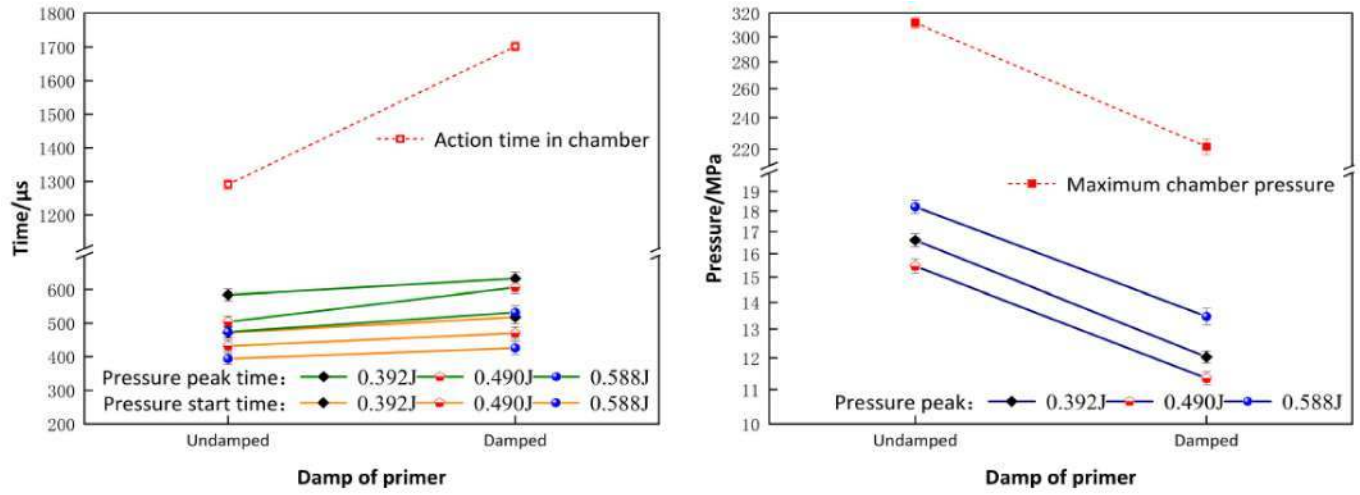

a The influence of pressure peak time and pressure start time on the action time in chamber under the condition of damp primer or not

b The influence of pressure peak on the maximum chamber pressure under the condition of damp primer or not

Figure 15. Law of influence of primer output pressure characteristics on internal ballistic performance with or without primer damping

The results of the above test data will be scattered, but the error range of the data points is relatively small, indicating that the test has good repeatability, the conclusion has high credibility, and the consistency of the test data is good.

3.7 The contribution of each influencing factor to the results of the interior ballistic performance test is analyzed

Principal component regression analysis (PCR) (Ma Y. R et al. 2011) is a method that combines principal component analysis (PCA) and multiple regression analysis. It is mainly used to solve the problem of multicollinearity between multiple independent variables.

$$C_i = \frac{\beta_i^2 \cdot \sigma_{X_i}^2}{\sum_{j=1}^{k} \Delta Q_j \sigma_{X_j}^2} \times 100\% \tag{7}$$

In the formula, β_i is the standardized regression coefficient, generally: $|\beta_i| \in (0, 0.8)$, $\sigma_{X_i}^2$ is the variance of the i independent variable. $i = j = 0, 1, 2 \cdots, k$

ΔQ is the performance deviation coefficient: $\Delta Q = \frac{|(Q_{test} - Q_{baseline})|}{Q_{baseline}} \times 100\%$ $(Q \in \{T, P_{\max}\}_i$, The baseline value $Q_{baseline}$ in the formula is the average value obtained by the test system.

In order to quantify the influence of various factors on the internal ballistic performance, based on six groups of orthogonal experimental designs, principal component regression was used to calculate the standardized contribution of each factor to the internal ballistic performance changes such as the action time in chamber (T) and the maximum chamber pressure (P_{max}) (Wang F et al. 2016): as shown in Figure 16.

As shown in Figure 16, the contribution of the amount of priming composition to the action time in chamber is 52%, the contribution to the maximum chamber pressure is 57%, the contribution of the damp of the primer to the action time in the chamber is 28%, and the contribution to the maximum chamber pressure is 34%. In contrast, the contribution of the protrusion of the firing pin to the action time in the chamber is only 6%, and the contribution of the interference of the primer assembly to the maximum chamber pressure is 1%. The results show that the factors such as the dose of priming composition, the damp of primer and the ambient temperature have a great influence on the internal ballistic performance, while the factors such as the firing pin protrusion, the interference of primer assembly and the depth of primer seating have little influence on the internal ballistic performance.

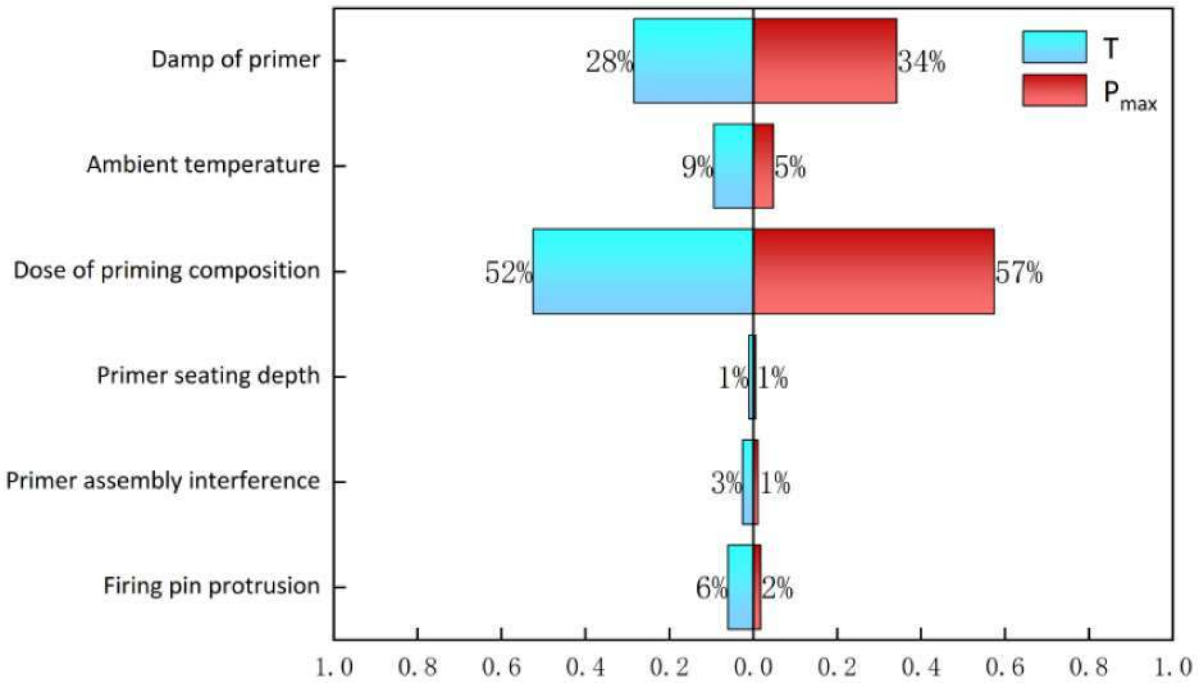

Figure 16. : The contribution of each influencing factor to the test results

4 Conclusion

In this paper, based on the primer output test device and the internal ballistic performance test device, a small-caliber bullet is used as the test object, and the influence of the primer output pressure characteristics on the interior ballistic performance under the action of factors such as the firing pin protrusion, the interference amount of the primer assembly, the depth of the primer seating, the amount of the priming composition, the ambient temperature, and the damp of the primer is or no. Combined with the principal component regression analysis method, the contribution of each influencing factor to the interior ballistic performance parameters is obtained, and the regulation law of the primer pressure output on the internal ballistic performance under different factors is revealed. The main conclusions are as follows:

1) When the pressure peak of the primer performance output decreases, the maximum chamber pressure decreases, and the action time of the bullet in the chamber is prolonged within a certain range. There is a positive correlation between the peak pressure and the maximum chamber pressure. The shorter the pressure start time and pressure peak time of the primer output, the shorter the action time of the bullet in the chamber.
2) The dose of priming composition, damp of primer and ambient temperature have a great influence on the internal ballistic performance, while the firing pin protrusion, primer assembly interference and primer seating depth have little influence on the internal ballistic performance.
3) The reduction of the priming composition will significantly delay the pressure start time and pressure peak time of the primer output, resulting in prolonged action time in chamber of the bullet. When the priming composition is reduced by 50%, the average time of the bullet in chamber is increased by 111.6%, and the average value of the maximum chamber pressure is reduced by 71.9%.
4) The decrease of ambient temperature will make the pressure start time of primer output lag and the pressure peak decrease significantly, which will lead to the prolongation of the action time of bullet in the chamber, the decrease of the chamber pressure, and the increase of the firing time of the bullet. When the ambient temperature decreases, the average action time of the bullet in chamber increases by 10%, while the average maximum chamber pressure decreases by 15%. When the environment increases, the action time in chamber decreases, and the maximum chamber pressure does not change significantly.
5) After the primer is dampened, the pressure start time and pressure peak time of the primer output lag seriously. The action time of bullet in chamber is obviously prolonged, which is about 132% of that in the undamped state. The maximum chamber pressure is significantly reduced, which is about 71% of that in the undamped state, resulting in a significant increase in the firing time of the bullet.

This paper provides an important basis for further understanding the mechanism of bullet launch and optimizing the design of the weapon system.

Acknowledgments

The authors gratefully acknowledge the financial support from the National Natural Science Foundation of China (Grant No. 12402468), the Shanxi Provincial Basic Research Program (Grant No. 202403021222158), and the Postdoctoral Fellowship Program of the China Postdoctoral Science Foundation (Grant No. GZB20250003).

Author's Contribuitions: Conceptualization, Zhifang Wei; methodology, Zhifang Wei and Yongjie Shang and Yukun Shi; investigation, Jingguo Liang and Fengxia Li; writing—original draft preparation, Yongjie Shang; writing—review and editing, Zhifang Wei; visualization, Yongjie Shang; supervision, Kebin Zhang; project administration, Zhifang Wei.

Data Availability: Research data is only available upon request

Editor: Marcílio Alves

References

AMCP 706–107. (1963). Research And Development of Material Engineering Design Handbook: Elements of Armament Engineering (Part Two) Ballistics.

GJB 3196.42A–2005k. (COSTIND) (2005). Bullet test methods-Part 42: Direct measurement method for in-bore action time test.

Fang, Y. C. Wang, Y. J. Sha, J. l. (2022). Action failure mechanism of fixed rigid shell throwing mechanism of firearms. Acta Armamentarii, (09): 2252-2262.

Zhang, S. X. Li, Y. R. Wei, Z.F. (2025). Study on hangfire failure mechanism in firearm firing-ignition systems. Sci Rep 15, 10162.

AMCP 706–150, (1965). Interior Ballistics of Guns, Ballistics Series of the U.S. Army Materiel Command Engineering Design Handbook.

Abdullah, Ş. Halil, I. Celal, E. (2016). Thermo-mechanically coupled thermal and stress analysis of interior ballistics problem, International Journal of Thermal Sciences, Pages 39–53, ISSN 1290–0729.

MAGAZINE, (2023). Cartridge, Soft Pack, Reusable, M249, 5.56MM Machine Gun (Metric). General Specification for.

Corner, J. (1950). Theory of the Interior Ballistics of Guns Wiley, New York.

Ercan, D. (2015). Effects of grain size and temperature of double base solid propellants on internal ballistics performance, Fuel, Pages 95–102, ISSN 0016–2361.

Zhou, F. Liu, N. Zhang, X. Y. You, X. D. (2020). 1D study of the detonation phenomenon and its influence on the interior ballistics of the combustion light gas gun, Defence Technology, Pages 341–347, ISSN 2214–9147.

Dong, X. l. Rui, X. T. Li, C. (2023). Interior ballistic two-phase flow model and its calculation for a mixed charge structure, International Communications in Heat and Mass Transfer, ISSN 0735–1933.

Chen, A. Yu, Y. G. (2022). Investigation of particle distribution after the energetic module broken in the ignition process of gun, Case Studies in Thermal Engineering, ISSN 2214–157X.

Ma, Y. (2020). Optimal design of launch charge and analysis of combustion performance in chamber. Nanjing University of Science and Technology.

Zou, L. Fan, J. Huang, J. (2024). The Construction of a Small-Caliber Barrel Wear Model and a Study of the Barrel Wear Rule. Coatings. 14(9): 1200.

Liu, G. Q. Xu, C. (2024). Influence of Ammunition Parameters and Errors on In-bore Motion of Warhead. Journal of Artillery Launch and Control.

Ding, S. Y. Shan, Y. H. Wang, P. (2021). Influencing factors and comprehensive performance analysis of machine gun barrel temperature. Arm Equipment Engineering Journal, 42 (11): 109-113.

Xu, H. Zhang, R. J. Jiang, M. F. (2022). The influence of chamber offset on the dynamic response of small-caliber embedded bullet. Army Journal, 43 (09): 2219-2230.

Lu, Y. Zhou, K. D. He, L. (2015). Study on the influence of the structural parameters of the slope chamber on the internal ballistic squeezing period of the gun. Army Journal, 36 (07): 1363-1369.

Zhang, Z. J. Ding, Q. H. Liu, Z. W. (1993). A preliminary study on the relationship between the combustion characteristics of the primer and the interior ballistic performance. Journal of Ballistics, (03): 16–21 + 26.

Zhang, S. X. Li, Y. R. Wei, Z. F. (2024). Simulation analysis of ignition reliability of gun ignition system. energetic materials, 11 (04): 1–13.

Wei, Z. F. Xin, C. F. Hou, X. C. Su, Y. F. & Wang, F. Z. (2023). Mechanical–thermal–chemical coupled modeling techniques and numerical simulation methods for the firearm igniting process. Propellants, Explosives, Pyrotechnics, 48, e202200244.

WJ 2127 - 1993. (1993). General specification for ballistic guns. China Weapons Industry Corporation.

Wei, Z. F. Xin, C. F. Su, Y. F. (2024). A test evaluation method and device for the output performance of firearm firing ignition system. Shanxi Province: CN202210287963.9,2024–01–23.

Zhao, C. C. Wei, Z. F. Guo, X. X. (2022). Design of a gun firing ignition system simulation test device. Army automation, 41 (04): 10–13 + 18.

GJB 6228 - 2008k. (2008). Interior ballistic test methods for ballistic guns, bullets and their propellants. Industrial Committee of Defense Science and Technology.

Yi, S. Y. (2017). Principle and Construction of Automatic Weapons. Chang sha: National University of Defense Technology Press.

GJB 3484–98. (1998). Gun Bullet Performance Test Methods. National Defense Science and Technology Industry Commission.

Peng, X. Liu, B. (2018). Constraint analysis of signal processing methods for laser Doppler velocimetry. Journal of System Simulation, 30 (05): 1927-1934.

Hou, J. l. Chen, Y. X. Jiao, Z. P. (2015). Design of Laser Compound Light Screen Target Velocity Measurement System. Journal of Missile, Rocket and Guidance, 35 (01): 181-184.

GJB 3196. 42A–2005k. (2005). Bullet test methods-Part 42: Action time in chamber test-Indirect measurement method. National Defense Science and Technology Industry Commission.

Ou, X. B. Yin, R. l. Wang, X. Y. (1995). Structural Design of Automatic Weapons. Bei jing: Beijing Institute of Technology Press.

GJB 736. 16A–2019. (2019). Initiator test methods-Part16: Determination of ignition pressure-time curve. National Defense Science and Technology Industry Commission.

Yu, Y. B. Wei, Z. F. Li, Y. R. Hou, X. C. Xin, C. F. (2024) Firearms Percussion Ignition System Performance: Influencing Factors and Sensitivity Analysis. Latin American Journal of Solids and Structures: n. pag.

Li, B. Wei, Y. Z. Xin, C. F. Wei, Z. F. Shi, Y. K. (2023). Experimental Study on the Diverse Output Performance of a Firearm Firing-Ignition System, 20(4): 455-477.

Ma, Y. R. Zhang, L. Yi, L. H. (2011). Fault diagnosis of amphibious assault vehicle hydraulic motor based on principal component regression analysis. Information system engineering, (03): 41–43.

Wang, F. Si, G. Y. (2016). Analysis and measurement method of weapon equipment system capability contribution. Military operations research and system engineering, 30 (03): 10–15.